N-Ject™ NH_3

Simple. Accuracte. Reliable.

CapstanAG's N-Ject™ NH_3 system provides row-to-row uniformity while allowing for variable rate applications.

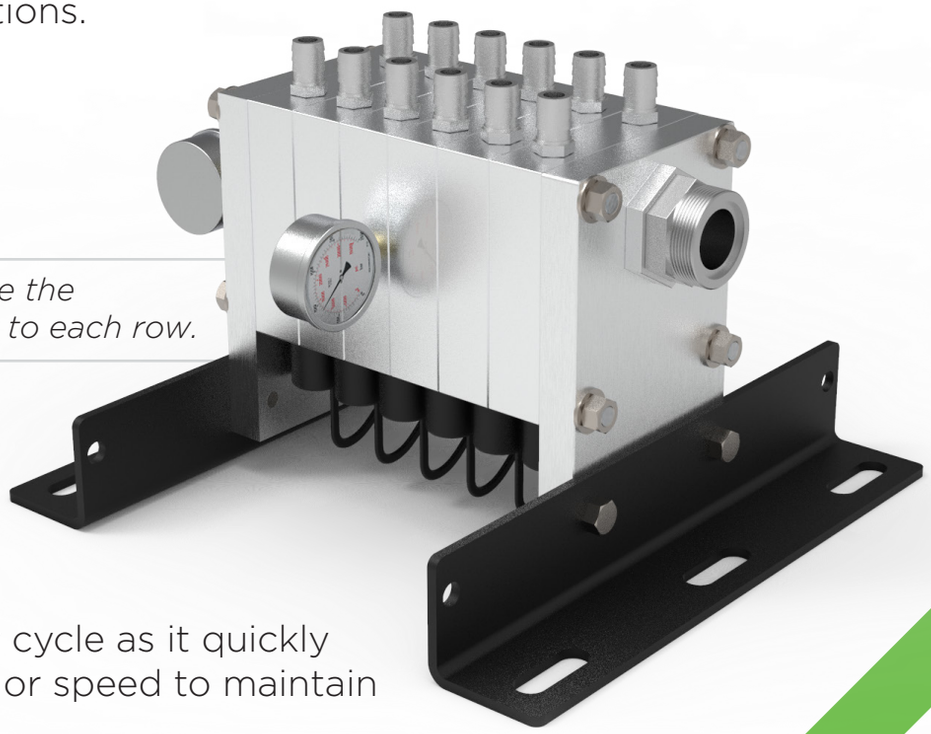

N-Ject utilizes PWM technology inside the modular manifold to control NH_3 flow to each row.

The system tailors the pulse duty cycle as it quickly compensates for changes in rate or speed to maintain your target application.

Correct application of Nitrogen is critical to getting the best yield from your crops.

N-Ject NH_3 Benefits

Precise row to row accuracy

Compensates for rate and speed changes

Variable rate on the fly

N-Ject™ NH_3

Simple. Accurate. Reliable.

How N-Ject NH_3 Works

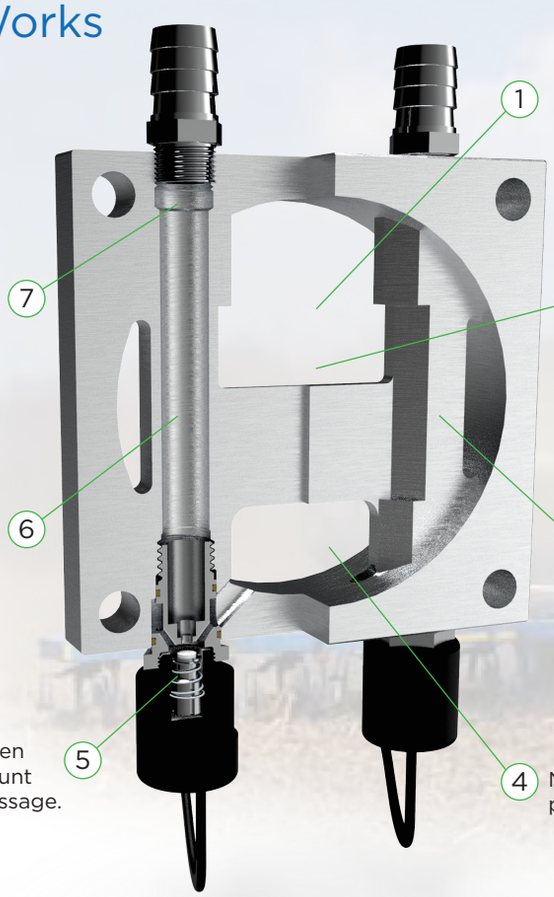

N-Ject™ NH_3 has a 6% or less distribution variabilty, providing an application that will be on target. Conventional application technology weighs in with a typical 18-22%. This performance leaves unwanted streaks and entire fields with misapplication.

Visit us online or your CapstanAG Dealer for a demo

www.capstanag.com • 855-628-7722

©2016-18 Capstan AG Systems, Inc. All Rights Reserved All trademarks are owned by Capstan Ag Systems, Inc.