SharpShooter®
With Rate Sync®

Operator and Maintenance Manual

APPLICATION SYSTEMS
FOR PROFESSIONALS

www.capstanAG.com

CapstanAG

How Can We Help?
855-628-7722
prodsupport@capstanag.com

P/N 118156-002 Rev. B | Revised 06/2017 |

Thank you for your business!

At CapstanAG™, our goal is to redefine the way people do their chemical application. Our PWM control systems have been setting the bar for maximum productivity for more than 20 years. Our focus on performance, support, and education have dramatically changed the landscape of agricultural chemical application.

Capstan® Ag Systems, Inc. specializes in creating proprietary systems for the agricultural industry, primarily focusing on chemical and fertilizer applications. Our inventive process involves research, engineering, design, and lab and field testing.

Service Contact Information

If a problem occurs with your system that cannot be corrected with the information in this manual, please contact your dealer for service and technical assistance. If further assistance is needed, contact CapstanAG™.

System Purchased: _____

Dealer:_____

Contact:_____

Phone:_____

Address:_____

City,State/Province,Zip:_____

Factory Service/Repairs

CapstanAG™
4225 S.W. Kirklawn Ave. | Topeka, KS 66609

Hours: 8:00 a.m. to 4:00 p.m. CST

Toll-free number: (855) 628-7722 | Fax: (785) 232-7799

E-mail: prodsupport@capstanag.com | Online: www.CapstanAG.com

CONTENTS

THIS PAGE IS INTENTIONALLY LEFT BLANK

1.0 - INTRODUCTION

1.1 - This Manual

Make sure that all personnel have read this manual and thoroughly understand safe and correct operation and maintenance procedure. Failure to do so could result in personal injury or equipment damage.

This manual should be considered a permanent part of your system and should remain with the system when you sell it.

Right and left sides are determined by facing in the direction of forward travel of the machine the system is on.

The information, screen shots, and other illustrations were correct at the time of publication. Changes can occur without notice.

This manual contains important information on how to safely and correctly install, operate, and maintain CapstanAG™ equipment. These instructions will help keep personnel safe, reduce downtime, and increase the reliability and life of the equipment, its components, and related systems.

Review the safety information in the Original Equipment Manufacturer (OEM) agricultural equipment manual(s).

Follow the instructions (in this manual) for each step to make sure that work conditions in and around the OEM equipment are safe.

It is important for all individuals working with chemicals to understand the potential risks, necessary safety precautions, and proper response in the event of accidental contact.

- Review the OEM agricultural equipment manual(s) for chemical safety information.
- Review, understand and read procedures and use Safety Data Sheets (SDS) and the required Personal Protective Equipment (PPE) for hazardous chemicals.

Please keep this manual and all enclosed documentation in an accessible location known to all operators, installation, and maintenance personnel.

If you do not understand the CapstanAG™ equipment after reading this manual, please obtain the proper training before working with equipment to make sure of your own safety and well as your co-workers' safety.

Do not attempt to operate any equipment or system until you completely understand why, when, and how it operates. If you are uncertain after studying this manual, please contact CapstanAG™.

1.2 - System Identification

Write the system name, serial number, and other information down in the Service Contact Information on the inside cover of this manual. Your dealer will use these numbers when you order parts. File a copy of the identification numbers in a secure place off the machine.

If you are not the original owner of this machine, it is in your interest to contact your local CapstanAG™ dealer to inform them of this unit's serial number. This will help Capstan® Ag Systems, Inc. notify you of any issues or product improvements.

1.3.1 - Location of System Identification

Controller Serial Number

The serial number for the controller is on a decal on the outside of the controller.

2.0 - SAFETY

2.1 - Signal Words

[Figure 1] - Signal words designate a degree or level of hazard seriousness.
DANGER indicates an imminent hazard which, if not avoided, will result in death or serious injury. This signal word is limited to the most extreme situations, typically for machine components that, for functional purposes, cannot be guarded.
WARNING indicates a potential hazard which, if not avoided, could result in death or serious injury, and includes hazards that are exposed when guards are removed. It may also be used to alert against unsafe practices.
CAUTION indicates a potential hazard which, if not avoided, may result in minor or moderate injury. It may also be used to alert against unsafe practices.

Figure 1

[Figure 2] - IMPORTANT and NOTE

IMPORTANT: This is used to draw attention to specific information that is necessary in the operation, setup, or service of the system.

NOTE: This is used for additional information that can help understand or operate the system.

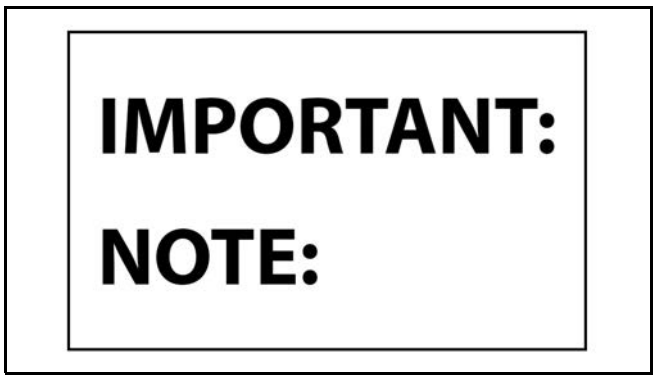

Figure 2

2.2 - Pressurized Fluid Lines

Do not heat by welding, soldering, or using a torch near pressurized fluid lines or other flammable materials. Pressurized lines can accidentally burst when too much heat is present.

2.3 - Personal Protective Equipment (PPE)

Wear close fitting clothing and the correct PPE for the job. See the manufacturer's manual or other information for correct PPE.

2.4 - Battery Safety

Use the procedure in the appropriate agricultural equipment manual for connecting, disconnecting, and jump-starting the machine's battery.

Keep sparks and flames away from the battery. Battery gas can explode and cause serious injury. Do not smoke in the battery charging area.

Remove jewelry, which might make electrical contact and create sparks.

2.5 - Chemical Safety

Chemicals used in agricultural applications can be harmful to your health and/or the environment if not used correctly. Always follow all label directions for effective, safe, and legal use of agricultural chemicals.

2.6 - Emergency Safety

Fire extinguishing systems must meet the applicable OSHA requirements and all users of portable/fixed fire suppression equipment must know the types, limitations, and proper uses of this equipment; including hazards involved with incipient stage firefighting.

Keep emergency numbers for doctors, ambulance service, hospital, and fire department near your telephone.

Know where fire extinguishers and first aid kits are located and how to use them.

Inspect the fire extinguisher and service the fire extinguisher regularly.

Follow the recommendations on the instructions plate.

Very small fires can be put out (extinguished) with a fire extinguisher. Use an appropriate method to extinguish a fire (water for paper fires, and chemical extinguishers for electrical or chemical fires.

2.7 - Safety Signs

[Figure 3] - The HCS aligned its provisions with the United Nations' Globally Harmonized System (GHS) Classification and Labeling of Chemicals in 2012. This is a GHS safety label example for a chemical hazard.

These labels and safety messages warn all personnel about hazardous chemicals or potentially unsafe chemical conditions that may exist while working around agricultural application equipment.

CapstanAG® add-on application systems for OEM and retrofit agricultural application equipment (booms and tool bars) may contain HCS pictographs and GHS safety labels and safety signal word messages.

Figure 3

3.0 - INSTALLATION

NOTE: Your SharpShooter® with Rate Sync® system has been shipped according to your machine's boom configurations. Make sure that the individually marked Boom Section box components/harnesses are installed on the appropriate boom sections (1 through 5, etc).

NOTE: The boom section box components, harness lengths and component quantities will vary according to each machine boom section configuration.

3.1 - SharpShooter® with Rate Sync® Base Kit

Verify all parts arrived as shipped.

Check the list of parts for your machine from the shipping materials. It should look something like this list; only specific to your machine.

118703-003 - SHARPSHOOTER® WITH RATE SYNC® BASE KIT		
PART NO.	**DESCRIPTION**	**QTY.**
118550-002	SharpShooter® with Rate Sync® Display	1
118156-002	SharpShooter® with Rate Sync® Operator and Maintenance Manual	1
118600-012	Power Hub	1
116301-001	Pressure Sensor Assembly - 100 psi	1
118200-035	Pressure Sensor Adapter Harness	1
118676-001	Power Harness - 40 ft	1
118200-033	Cab Box Pigtail - 10 ft	1
120140-016	DB9 x 15 ft Serial Extension	1
118640-107	Power Hub Cover, Assembly	1
118703-002	SharpShooter® with Rate Sync® Installation Kit	1
116200-045	2-Pin Tower Weather Pack Dust Plug	20
116200-046	3-Pin Tower Weather Pack Dust Plug	11
706530-348	6-Pin Deutsch Dust Plug	7

3.2 - SharpShooter® with Rate Sync® Display

[Figure 1] - Choose a mounting location in the cab within reach and view of the operator. Use the mounting hardware (1) supplied in the kit to mount the SharpShooter® with Rate Sync® display (2).

Figure 1

3.3 - Serial Extension

NOTE: SharpShooter® with Rate Sync® requires a GPS unit connected for the Rate Sync® feature to operate.

[Figure 2] - The GPS connection is achieved by attaching a GPS receiver signal to SharpShooter® with Rate Sync® display via a serial adapter cable end (1) to the GPS port (2) located on the backside of the display. Connect the serial adapter cable end (3) to the machine GPS system.

SharpShooter® with Rate Sync® requires VTG messages at a recommended rate of 10HZ to function properly.

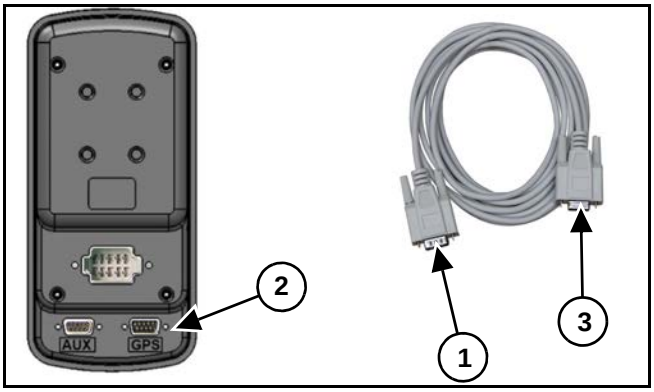

Figure 2

3.4 - Cab Box Pigtail - 10 ft

[Figure 3] - Connect the Deutsch 8-Pin connector fused end of cab box pigtail to display. The other end of the cab box pigtail will route out of the cab.

Figure 3

3.5 - Power Hub

[Figure 4] - Use the hardware mounting kit (1) to install the power hub (2) on, or near, the center of the boom mast.

The power hub box contains:

NOTE: Mount the power hub in either a horizontal or vertical position, so that water will not collect near the wires. Mounted horizontally will allow the power hub cover correct orientation.

- Operator and Maintenance Manual
- Power Hub
- Pressure Sensor
- Boom Shutoff Adapter
- Circuit Breaker
- Cable Tie Kit
- Plugs
- Extension 3 cond x 10’

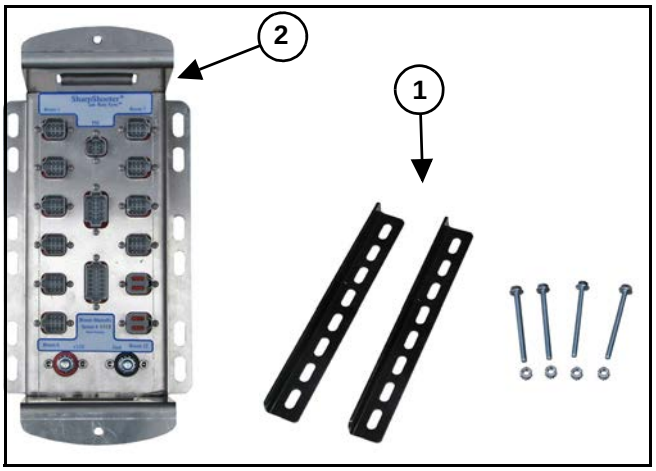

Figure 4

3.6 - Pressure Sensor

NOTE: Install the pressure sensor and plumbing in a location that will have an accurate reading when all or only one boom section is turned on.

NOTE: The pressure sensor should be installed vertically with the harness located at the top.

[Figure 5] - Install the pressure sensor near the boom section manifold. A good location for the pressure sensor is near the sprayer's pressure gauge port.

It is recommended that the pressure sensor be installed near the existing pressure sensor or pressure gauge (in the main boom plumbing).

The pressure sensor has a male 1/4 inch pipe thread boss. Sometimes an unused boss is available on the sprayer. It is usually necessary to remove the pressure gauge / line and install a tee (supplied with kit).

A short nipple may be required to install the tee, and a reducer bushing may be required to facilitate 1/4" pipe threads.

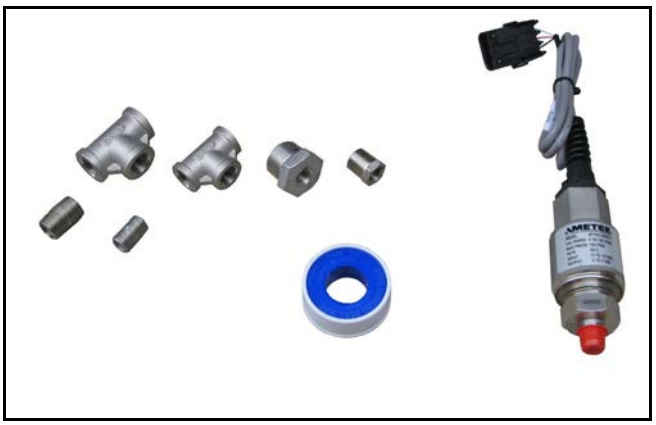

Figure 5

3.7 - Harness Pressure Sensor

[Figure 6] - Connect the pressure sensor harness 3-Pin tower connector to the pressure sensor. Route the male Deutsch 4-Pin connector and connect it to the power hub.

Figure 6

3.8 - Nozzle Harnesses

[Figure 7] - Route and secure the nozzle harnesses along the boom sections.

When installing the nozzle harnesses along the booms, remember that the nozzle harness connector wires are color coded. The nozzle harness connectors have a white and black wire, while the adjacent connector has a green and black wire.

Every other nozzle should pulse together to create pulse blending:

- White wire odd pulse
- Green wire even pulse.

Additional wire length is required when routing nozzle harnesses around boom fold hinges.

When routing nozzle harnesses around a boom fold, skip and cap two nozzle harness connectors around the boom fold. When connecting the nozzle harness pigtail to the next nozzle valve, allow enough slack in the harness for the operation of the boom fold and preserve the correct nozzle alternation.

NOTE: Install dust caps on all the unused connectors and secure the nozzle harness wiring with cable ties, allow enough slack to operate the boom fold.

NOTE: The nozzle harness connectors should alternate along the boom, white/green wire alternation.

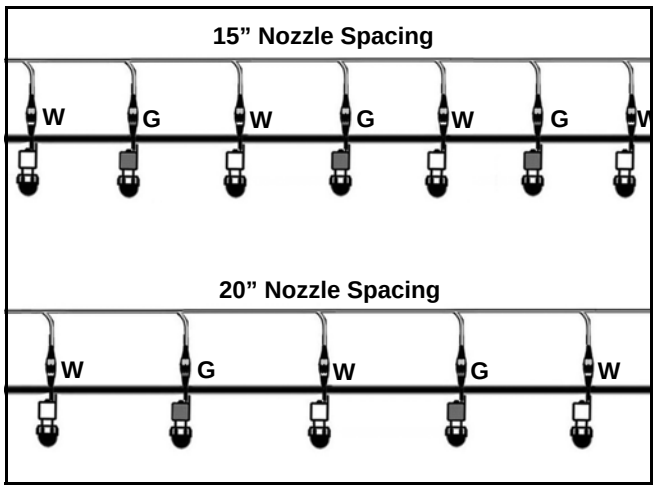

Figure 7

3.9 - Valve Drivers

[Figure 8] - With cable ties, mount and secure the valve driver(s) (1) to the boom, near the first nozzle valve on each boom section.

NOTE: Mount the valve driver in a horizontal or vertical position, so that water will not collect near wires.

Connect the 3-Pin shroud connector (2) to the nozzle harness on each boom section.

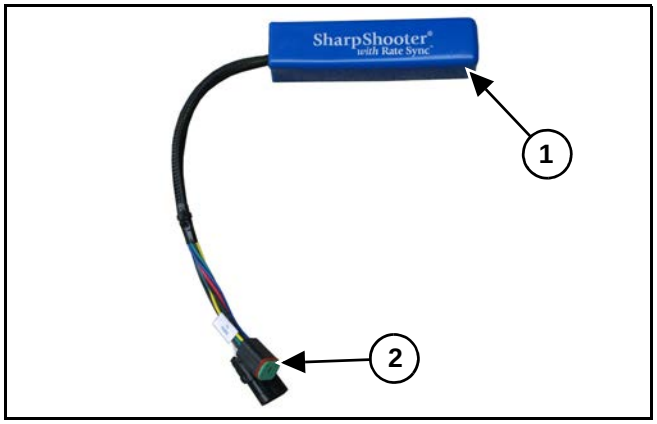

Figure 8

3.10 - Nozzle Valves

[Figure 9] - If equipped, remove and discard the drip check (1) and the diaphragm (2) from the nozzle bodies.

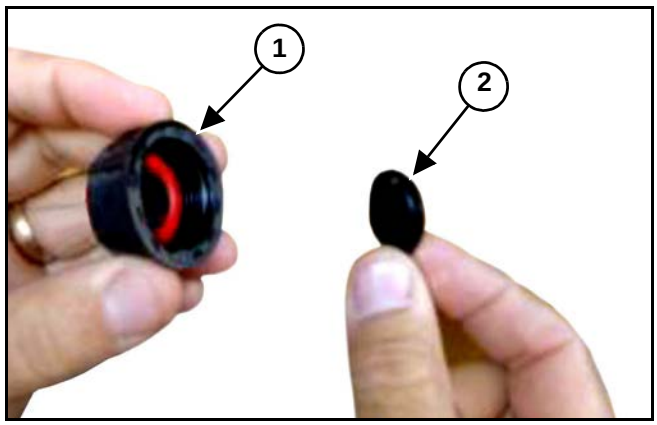

Figure 9

NOTE: While incorrect nozzle valves may install onto the nozzle body, they will leak or pop off under pressure. It is important to have the correct nozzle valve for the nozzle body.

[Figure 10] - Install the O-ring (1) supplied with the kit. Install the nozzle valve assembly (2) onto the nozzle body (3). Rotate the nozzle valve assembly so that the wire (4) is close to the boom. Tighten the fly nut (5). Install the spray tip (6).

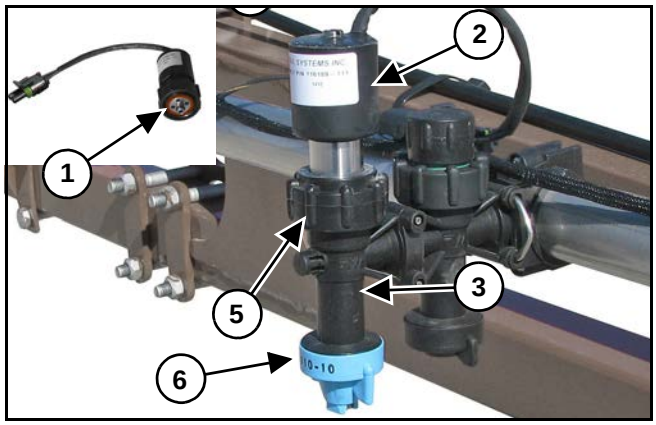

Figure 10

If the coil housing spins, tighten the fly nut until the coil housing does not spin. The nozzle valves only need to be snug to prevent leakage.

Install dust caps on any unused connectors.

[Figure 9] - [Figure 10] - Repeat the procedures for all nozzle valve assemblies.

NOTE: When ordering the SharpShooter® with Rate Sync® kit, the nozzle valve assembly threaded cap is unique to different brands of nozzle bodies. Be sure to have identified the nozzle body types being used on the sprayer.

NOTE: If interference issues arise when installing nozzle valves onto the sprayer nozzle bodies, see Special Installation Instructions (Nozzle Valves) on page 15.

3.11 - Nozzle Alternator Harness

[Figure 11] - A nozzle alternator harness is only required when the nozzle harness white/green wire alternation cannot be maintained between nozzle valves.

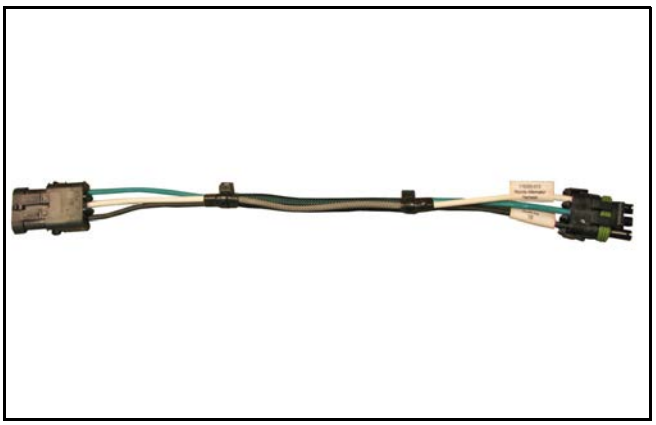

Figure 11

3.12 - Y-Adapter Harness

[Figure 12] - The 3-Pin Y-adapter harness is required when locating a valve driver on the center of a boom section. The 3-Pin tower end (1) will connect to the valve driver.

Each 3-Pin shroud end (2) connects to a nozzle harness and allows the nozzle harnesses to be routed in each direction on the boom section.

When connecting the 3-pin Y-adapter harness shroud ends to the nozzle harnesses, take note of the white wire (3) and white wire (4).

The connector white wire must connect to the nozzle harness on the first nozzle valve of the white alteration.

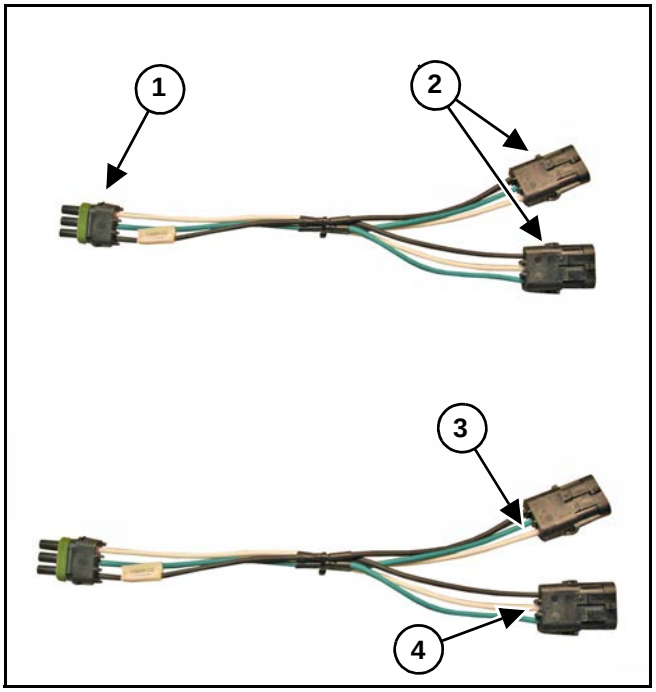

Figure 12

3.13 - Boom Extension Harness

[Figure 13] - Connect the boom 1, 2, 3, etc. extension harness female Deutsch 6-Pin connector (1) to the valve driver on each boom section. Route the male Deutsch 6-Pin connector (2) fused end along the boom and connect it to the appropriate connector on the power hub. Repeat for each boom section.

NOTE: To prevent damage to the wiring harnesses, allow enough slack to raise and lower the booms and to operate the boom folds.

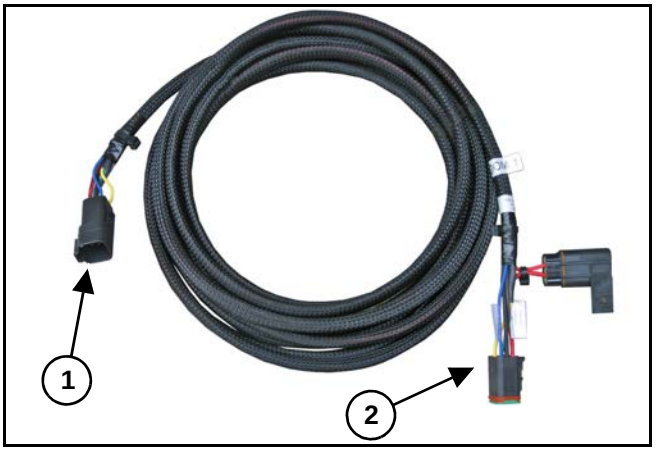

Figure 13

3.14 - Boom Shutoff Adapter

[Figure 14] - Install the boom shutoff adapter between the machine's boom section manifold and the machine's boom section harness. Connect the boom shutoff male adapter Deutsch 12-Pin connector (1) to the power hub.

Figure 14

3.15 - SharpShooter® with Rate Sync® Display Extension Harness

[Figure 15] - Install the SharpShooter® with Rate Sync® display extension harness male Deutsch 8-pin connector (1) to the power hub. Route and connect the female Deutsch 8-pin connector (2) to the cab box pigtail from the cab.

NOTE: Route and secure the extension harness along existing wiring/plumbing. Secure any excess wire with cable ties.

Figure 15

3.16 - Power Harness

[Figure 16] - Connect the power harness red wire terminal (1) to the power hub 12V (+) terminal (2).

Connect the power harness black wire terminal (3) to the power hub ground (-) terminal (4).

Route the power harness wire along existing wiring/plumbing until the wire reaches the machine's batteries.

NOTE: To prevent damage to the power harness, allow enough slack to raise and lower the booms.

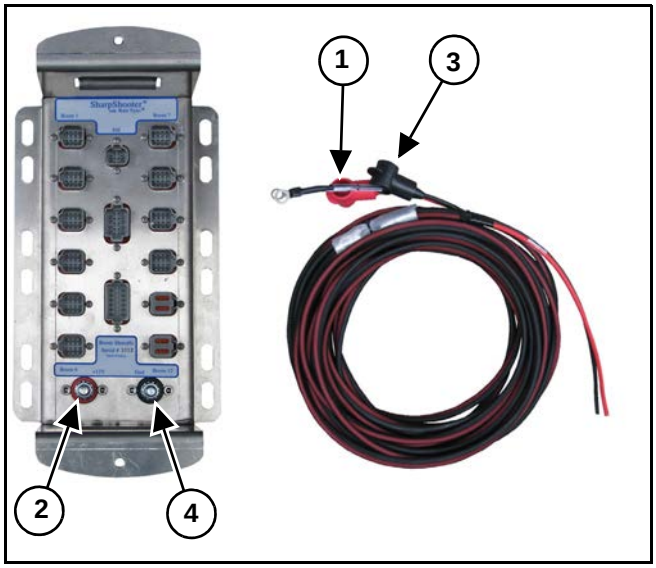

Figure 16

3.17 - Circuit Breaker

NOTE: Before installing the circuit breaker and battery connections, make sure that all SharpShooter® with Rate Sync® component wiring and connections have been completed.

Cut a length of wire from the power harness red (+) wire, long enough to reach from the circuit breaker to the battery (+) positive terminal. Strip the insulation from each cut. Crimp the provided ring terminals to each wire end.

[Figure 17] - Connect the power harness red (+) wire (1) to the circuit breaker. Then connect the red wire (2) to the circuit breaker (3) and battery (+) positive terminal.

Connect the power harness black (-) wire (4) to the battery ground terminal.

NOTE: If the machine is equipped with a power disconnect, connect the power hub power harness black (-) wire to the machine's power disconnect ground terminal.

NOTE: When disconnecting the battery terminals, remove the negative (-) cable first, then remove the positive (+) cable. When connecting cables, connect the positive (+) cable first, then connect the negative (-) cable.

NOTE: Once the SharpShooter® with Rate Sync® system installation is complete, the SharpShooter® with Rate Sync® system is ready for testing.

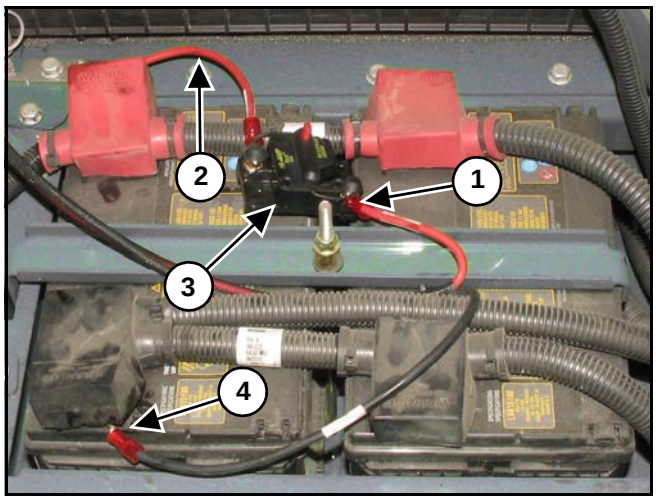

Figure 17

3.18 - Power Disconnect Kit (Optional)

[Figure 18] - A power disconnect kit is available for trailer sprayers or for sprayer applications where disconnecting of the battery power wires is desired.

NOTE: Disconnect the power hub power harness from the machine's batteries before installing the power disconnect.

NOTE: When disconnecting the battery terminals, remove the negative (-) cable first, then remove the positive (+) cable. When connecting cables, connect the positive (+) cable first, then connect the negative (-) cable.

Cut and strip the power harness wires at the desired disconnect location. Crimp the spacer bushing (1) and terminal (2) onto each wire. Insert the terminals into the housing, making sure that the positive (+) red wire and negative (-) black wire are in the correct housing (3) location.

NOTE: The power disconnect housing locations are marked with a (+) positive and (-) negative.

Reconnect the power hub power harness to the machine's batteries.

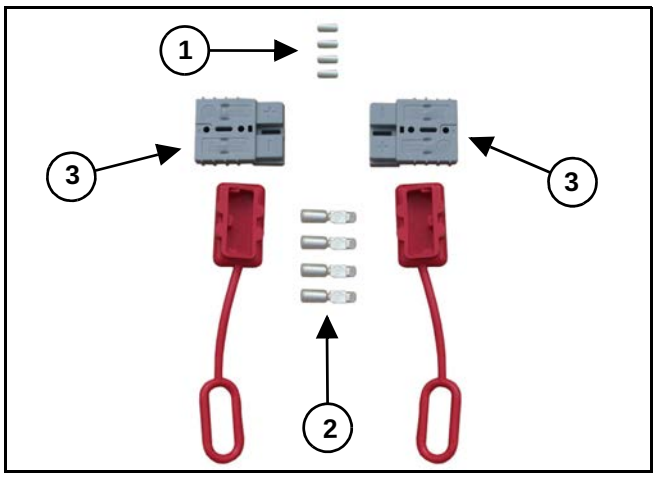

Figure 18

3.19 - Special Installation Instructions (Nozzle Valves)

The special installation instructions show the interference issues that occur on some models of sprayers.

Before removal or installation of the nozzle valves, make sure that the pressure has been released from the sprayer lines.

Some boom tube supports may need to be adjusted for nozzle valve assembly clearance.

[Figure 19] - If the knurls of the boom tube threaded caps (1) interfere with the nozzle valve threaded cap (2), slightly rotate the threaded cap until the nozzle valve assembly cap is free to rotate and tighten.

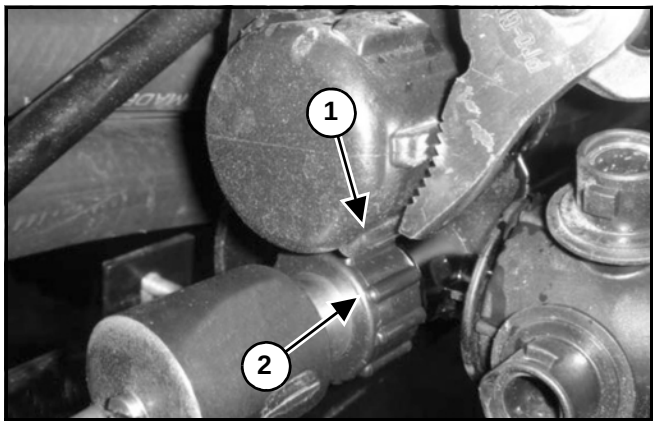

Figure 19

[Figure 20] - At the end of the inner boom structure, an additional section of boom can be added. A boom stop bolt (1) may interfere with the valve assembly installation.

In this case, the bolt was not required and removed. In addition, the boom liquid tube retainers were also loosened. The boom tube was moved slightly toward the inside of the machine in order to install the valve assembly.

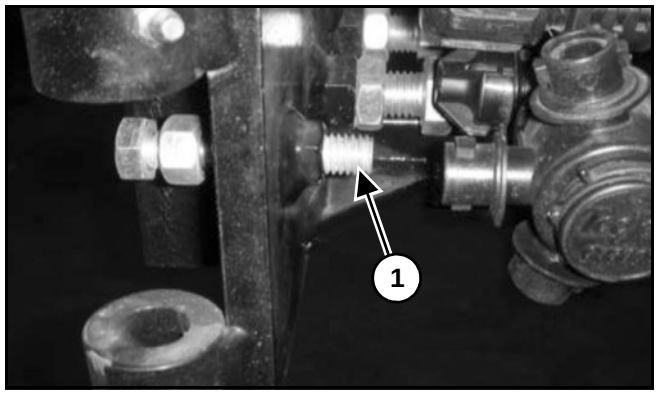

Figure 20

[Figure 21] - At two locations, the quick coupler boom tube (1) interferes with the valve assembly installation.

Remove the hose clamps (2) and quick coupler boom tube fitting.

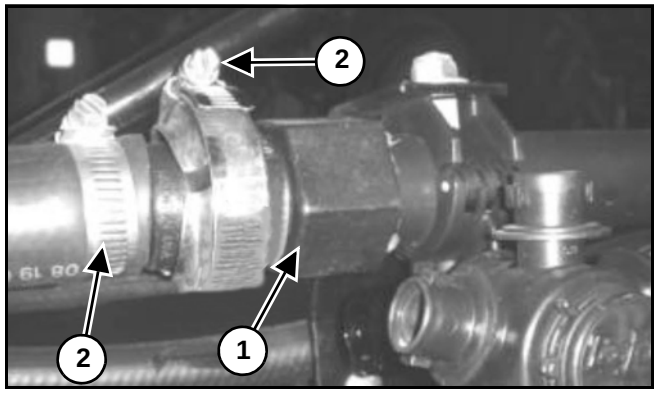

Figure 21

[Figure 22] - Glue and install the female coupler (1) and a male threaded barb (2).

Tighten the hose clamps (3).

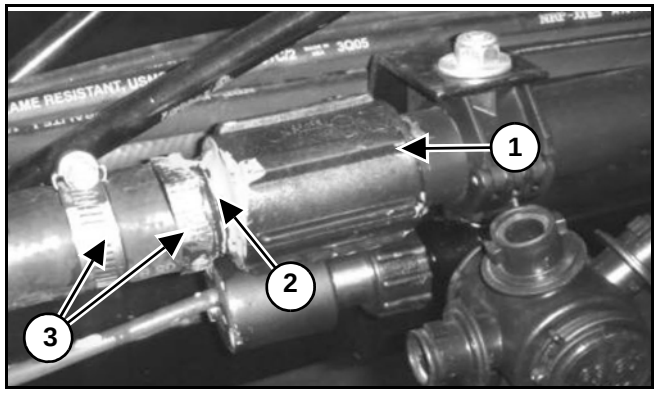

Figure 22

3.20 - Special Installation Instructions (Pressure Sensor)

Instructions are shown for the pressure sensor installed onto a sprayer. Installation procedures for your sprayer may be slightly different.

The pressure sensor should be installed vertically, with the pressure sensor up.

Sprayer lines may be pressurized. Relieve pressure before removing pressure sensor or pressure sensor lines.

[Figure 23] - Remove the sprayer pressure sensor line (1) from the 1/4" x 90° plastic elbow fitting (2).

Remove the 1/4" x 90° plastic elbow fitting.

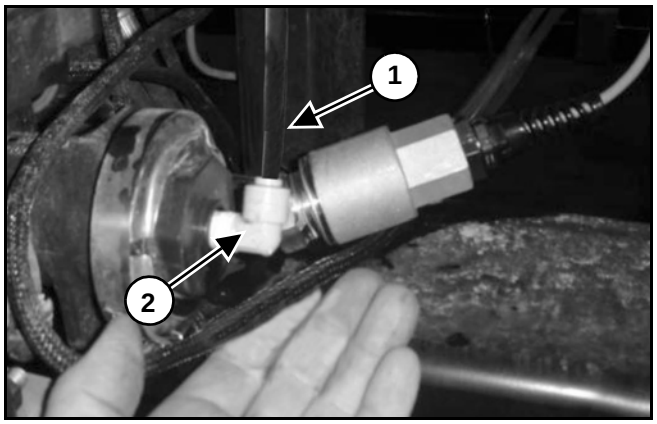

Figure 23

[Figure 24] - Use Teflon® tape to wrap and install the 1/4 inch nipple and the 1/4 inch tee fitting that are supplied with kit.

Wrap and reinstall the 1/4 inch x 90° plastic elbow fitting (3), then install the sprayer's pressure sensor line into the 1/4 inch x 90° plastic elbow fitting.

Wrap and install the pressure sensor (4) into the tee fitting.

NOTE: The pressure sensor will connect to the power hub.

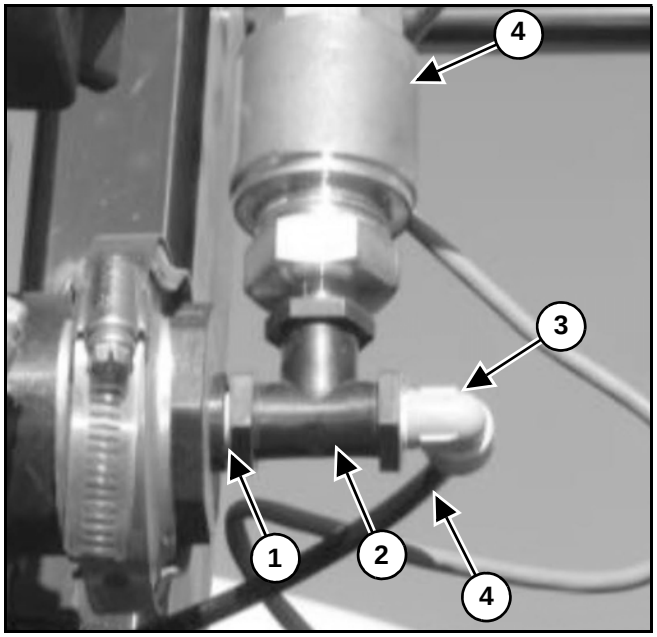

Figure 24

3.21 - SharpShooter® with Rate Sync® Installation Tips

Although the installation is usually straightforward, the following are common installation oversights:

1. Never connect more than 22 nozzle valves to a valve driver.
2. When routing nozzle harnesses through the boom fold and swing joints, skip two nozzle harness pigtails. This allows for boom joints to operate without damaging harnesses, and maintains even / odd nozzle pairing.
3. Where side by side nozzle valves are pulsing together, install the nozzle alternator harnesses on valve drivers to maintain even / odd pulses.
4. Never use air induction (AI) spray tips.
5. Route wires to allow for raise/lower movement of the boom mast, boom fold and boom swing functions.
6. When wiring to boom section signals, a custom harness is needed for unsupported platforms.
7. Connect the nozzle wiring harnesses to alternate pulsing on side-by-side nozzles.
8. Use the correct tip choices.
9. The menu screens are used to check key software settings. If you need assistance, contact your dealer or CapstanAG™ representative.

4.0 - SETUP

4.1 - Pressure Tuning with PID Parameters

SharpShooter® with Rate Sync® uses three control parameters to stabilize pressure in the control software algorithm.

System Gain - Changes the total gain of the system according to the same ratios of what the Proportional/Integral gain establish.

This gain number is the one most often used to tune sluggish or oscillating systems. The greater the number, the more sensitive the control system. Stabilize an oscillating system by selecting a lower number. Speed up a sluggish system by selecting a higher number.

System gain recommended starting value = 9.

P Gain - Proportional gain determines the speed that the SharpShooter® with Rate Sync® drives the duty cycle toward the target value.

Stabilize an oscillating system by selecting a lower number. Speed up a sluggish system by selecting a higher number.

P gain recommended starting value = 5.0.

I Gain - Integral gain determines the acceleration of duty cycle changes to the target value.

Stabilize an oscillating system by selecting a lower number. Speed up a sluggish system by selecting a higher number.

I Gain recommended starting value = 0.15.

4.2 - SharpShooter® with Rate Sync® Display Ports

[Figure 25] - Connections on the back of the display include:

- Main Harness Connection Port
- GPS Port
- Diagnostic (AUX) Port

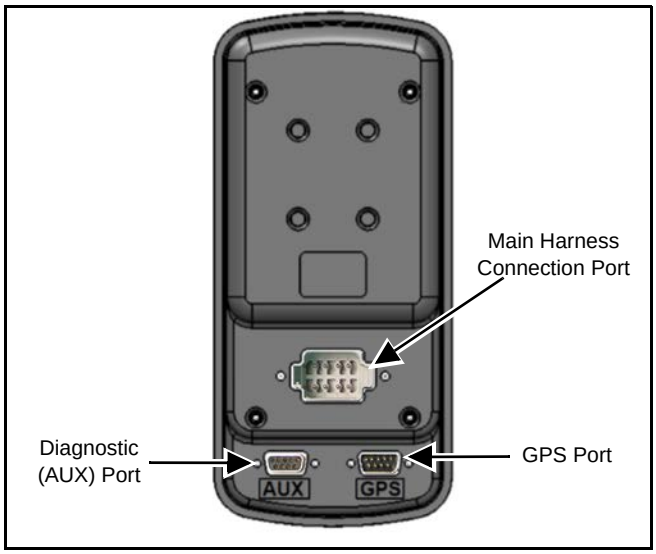

Figure 25

4.3 - SharpShooter® with Rate Sync® Programming

Contact a CapstanAG™ representative to install the correct software version onto the cab box.

A CapstanAG™ representative will need these items to install the correct software onto the cab box.

PART NUMBER	DESCRIPTION
	CapstanAG™ CAN Commander
120050-002	Translator Box and USB Cable
120055-001	Programming Cable

[Figure 26] -

1. Press the **POWER** button on the display.
2. Connect the translator and the programming cable to the diagnostic (AUX) port on the cab box and a computer.
3. On the computer, open the **CAN Commander** program.
4. Select **Cancel** on the window that opens.

Figure 26

[Figure 27] -

5. Click on the **Software Upload** tab (1).
6. Click on the circle next to **SSQ/Cab Box** (2).
7. Click **Locate Network Devices** (3).

Hardware that is available will show in the list.

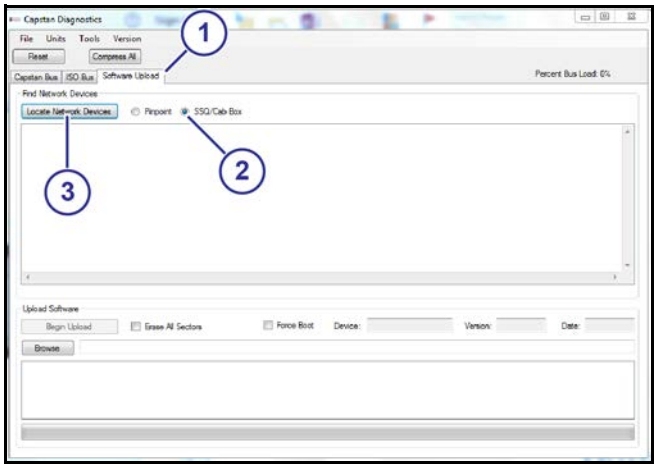

Figure 27

[Figure 26] -

8. Click on the box (1) next to **Erase All Sectors**.

Make sure that there is a check mark in the box.

9. Click **Browse** (2).

10. Find and select the desired code to upload.

11. Click **Open**.

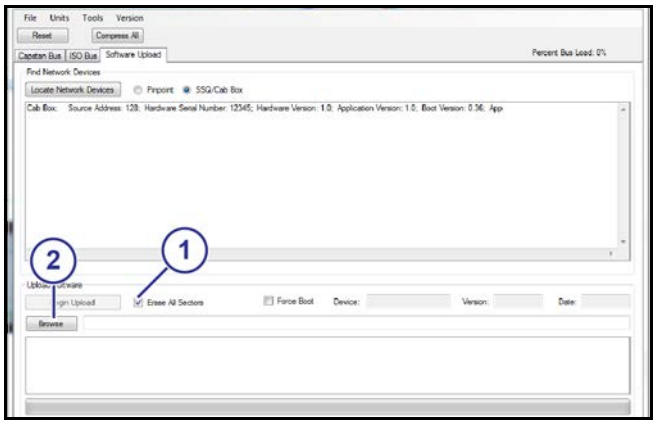

Figure 28

[Figure 26] -

12. Click on the hardware information (1).

The hardware information must be selected and highlighted to begin upload.

13. Click **Begin Upload** (2).

IMPORTANT: *The display will turn off when the upload is complete.*

14. Disconnect the programming cable and translator.

15. Press the **POWER** button on the display.

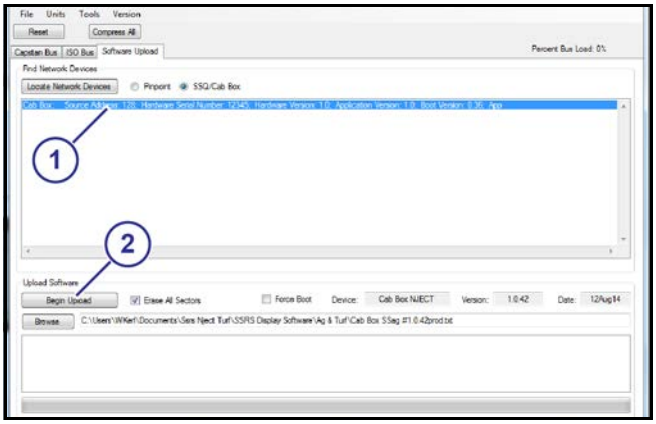

Figure 29

THIS PAGE IS INTENTIONALLY LEFT BLANK

5.0 - SYSTEM TESTING

5.1 - SharpShooter® with Rate Sync® Display

***Verify Power to the Display*:**

1. **[Figure 30] -** Turn on the display. It will default to the Manual Mode. A red light in the lower left corner of the power button will illuminate showing a properly working display.

2. Make sure that the display screen reads Manual Mode and a 50% duty cycle.

NOTE: This confirms that the display pigtail harness fuse is functioning and that power is being received.

Service Actions:

If the display does not power on, check the fuse and/or trace the power from the battery. Check pins, connectors, and wires for proper contact and/or damage.

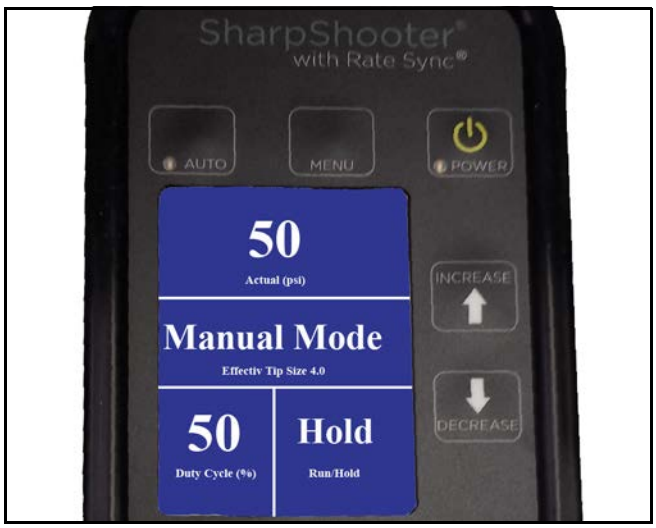

Figure 30

5.2 - SharpShooter® with Rate Sync® Menu Items

Verify that the display and rate controller programing parameters are set up correctly:

1. **[Figure 31] -** Power up the display, and press **MENU**. Do a check of the display parameters to verify correct settings. Reset if necessary. Reset to default valves.

2. Power up the rate controller. Verify the setup parameters.

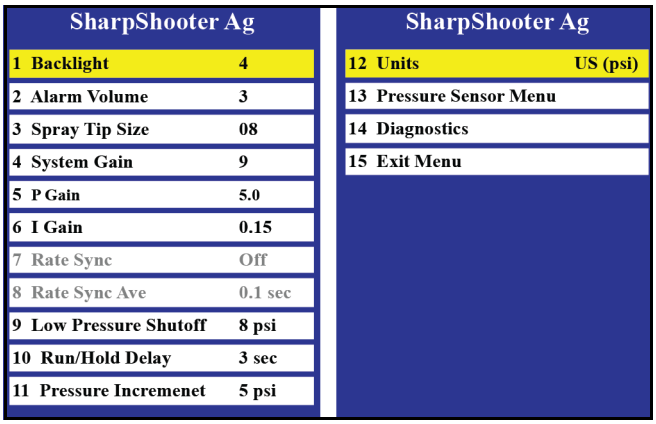

Figure 31

5.3 - SharpShooter® with Rate Sync® Dry Test

5.3.1 - Boom Section Control Test

Verify SharpShooter® with Rate Sync® solenoids match the rate controller section switches:

1. Turn the display on and leave in the **Manual Mode** at a 50% duty cycle.
2. Turn the rate controller on. An advanced rate controller will require starting a job. Verify the rate controller is in the **AUTO Mode**.
3. Toggle on all the section switches.
4. Toggle the master switch on.
5. All solenoid valves on the boom should start clicking.

Service Actions - If all the solenoids do not start clicking.

   a. Make sure that the shutoff adapter is connected to the rate controller harness boom section signal wires and to the power hub.
   b. Check the fuses on the valve drivers.
   c. Otherwise, trace the pulse signal from the display through power hub to the valve driver and solenoids by checking pins, connectors and wires. Pulse voltage should read about 6V on a DC scale. Fix or replace the failed component.
   d. Swap the valve drivers. If the solenoids start pulsing, replace the bad valve driver.

6. Toggle off all rate controller boom sections.
7. Toggle boom section 1 on.

NOTE: All solenoid valves on boom section 1 should start clicking. Some boom sections may have more than 1 solenoid assigned to it.

8. Repeat steps 6 and 7 for each boom section.

Service Actions:

If solenoid valves on a different boom section click on instead, the shutoff adapter is not properly connected to the appropriate rate controller harness boom section wires. Redo the connections until the proper section clicks.

5.3.2 - Manual Mode Test

To confirm that the display is functioning in **Manual Mode**, perform the following steps:

1. Set a test speed and a rate value in the rate controller.
2. Turn on the machine's product pump.
3. Turn on the boom, and allow the machine to spray water until rate and pressure values are achieved.
4. Place the display in the **Manual Mode**.
5. The display will default to 50% duty cycle.

NOTE: The boom should be spraying and the solenoid valves on the boom should be pulsing.

6. Use the **DECREASE** button to select 20% duty cycle to observe an increase in pressure.
7. Use the **INCREASE** button to select 80% duty cycle to observe a decrease in pressure.

5.3.3 - Auto Mode Test

To confirm that the display is operating in **Auto Mode**, perform the following steps:

NOTE: The rate controller may need to be adjusted to put display in a practical control range. See the rate controller operation manual.

1. Select **Auto Mode** and set the target pressure to 40 psi.
2. Observe that the display adjusts the pulse duty cycle to achieve 40 psi.
3. Set the rate controller in manual mode.
4. Using the rate controller, decrease the rate until display reaches minimum pulse duty cycle and displays minimum duty cycle in diagnostics area.
5. Using the rate controller, increase the rate until display reaches maximum duty cycle (100% or open flow).

Static Systems Check:

1. Set the rate controller to 10 GPA.
2. Enter a test speed of 10 mph.
3. Turn on the product pump.
4. Place the display in the **Auto Mode**.
5. Set target pressure to 40.

NOTE: Let the rate and pressure stabilize at 10 GPA and 40 psi. Check that the speed is at 10 mph.

Pressure Control Test:

1. Set target pressure to 60.
2. Check to see if the pressure does climb to 60 psi. With the test speed still at 10 mph, the rate should settle back to the 10 GPA mark.
3. Set target pressure to 20.
4. Check to see if the pressure does drop to 20 psi. With the test speed still at 10 mph, the rate should settle back to the 10 GPA mark.
5. Return target pressure to 40.

Flow Control Test:

1. Start with a test speed set at 10 mph, a pressure of 40 psi, and a rate at 10 GPA.
2. On the rate controller, increase the rate to 15 GPA.

NOTE: The rate controller should work to achieve the 15 GPA and the pressure should settle back to 40 psi.

3. On the rate controller, decrease the rate to 5 GPA.

NOTE: The rate controller should work to achieve the 5 GPA and the pressure should settle back to 40 psi.

Speed Control Test:

NOTE: If any of these installation tests fail, See Pressure Tuning with PID Parameters on page 19**.**

1. Start with a test speed set at 10 mph, a pressure of 40 psi and the rate at 10 GPA.
2. Increase the test speed to 15 mph.

NOTE: The rate controller should work to return to 10 GPA and the pressure should settle back to the 40 psi.

3. Decrease the test speed to 5 mph.

NOTE: The rate controller should work to return to 10 GPA and the pressure should settle back to the 40 psi.

If all tests are successful, machine is ready for use and the SharpShooter® with Rate Sync® system is now ready for field operation.

5.4 - SharpShooter® with Rate Sync® Wet Test

5.4.1 - Wet Test 1

Fill the sprayer with at least 100 gallons of water for these tests.

Perform the following steps:

1. Turn all components on.
2. Set a test speed in the rate controller.
3. Start with the rate controller in manual mode, this locks rate controller into a single rate. Turn on the display and remain in the **Manual Mode** at 50% duty cycle. (This locks in a particular duty cycle or tip and removes the SSRS Display impact on flow)
4. Using the display arrow buttons, increase/decrease the duty cycle to verify the duty cycle operation. The pulsing at the nozzles should change.
5. Increase/decrease the rate to verify the rate controller servo valve operation. The rate should change.

5.4.2 - Wet Test 2

Perform the following steps:

1. Place the rate controller in **AUTOMATIC mode** and the display in the **Auto Mode**.
2. Set a test speed in the rate controller and then set the display to 40 psi.
3. Static spray test control:
   - Rate Change (with constant pressure and test speed)
   - Pressure Change (with constant rate and test speed)
   - Speed Change (with constant rate and constant pressure)

5.4.3 - Wet Test 3

(Integration Checks)

1. Isolate the Rate Control System from the SharpShooter® with Rate Sync® system by turning the display to the **Manual Mode** and then set the display to 50% duty cycle.
2. Place the rate controller in **AUTOMATIC mode**.
3. Set a test speed in the rate controller, and then set the display to 40 psi.
4. Using the display arrow buttons, increase/decrease the duty cycle to verify pressure change. The rate controller should maintain the rate. If the problem is eliminated, the issue is with the SharpShooter® with Rate Sync® system. If the problem remains, the issue is likely with the rate controller.
5. Increase/decrease the rate to verify the rate controller valve operation. If the rate does not change, the issue is with the rate controller.

5.4.4 - Wet Test 4

(Advanced Integration Checks)

1. **Auto Mode** to **Manual Mode** comparison, see Performance Evaluation for Pulsing.
2. Valve calibration and PID parameter tweaking.
3. Run/Hold Time to check the timing of rate control changes (in the rate controller) to the pressure control response by the SharpShooter® with Rate Sync® system.

THIS PAGE IS INTENTIONALLY LEFT BLANK

6.0 - OPERATION

6.1 - SharpShooter® with Rate Sync® Display Controls

[Figure 4] - The display has five buttons to navigate and control the system. A screen on the display interface provides immediate information and easy access to the menu items.

Press the **POWER** button to turn the display on, the light behind the power button will illuminate.

NOTE: The system defaults to **Manual Mode** each time the display is powered up.

Press the MENU button to enter the main menu list.

NOTE: The **MENU** button doubles as enter/exit through all the menu items.

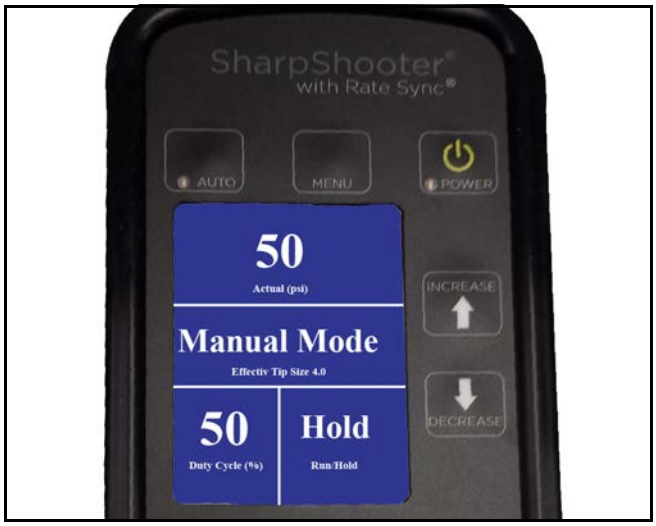

Figure 4

[Figure 5] - Main menu screens show all the menu items on the left and the current value of each on the right.

Press the **INCREASE** or **DECREASE** button to navigate the menu items highlighting the desired field.

Manually select duty cycle percentage, or effective tips size in **Manual Mode**, or set target pressure in **Auto Mode** letting the display determine the duty cycle, or in other terms, the effective tip size required.

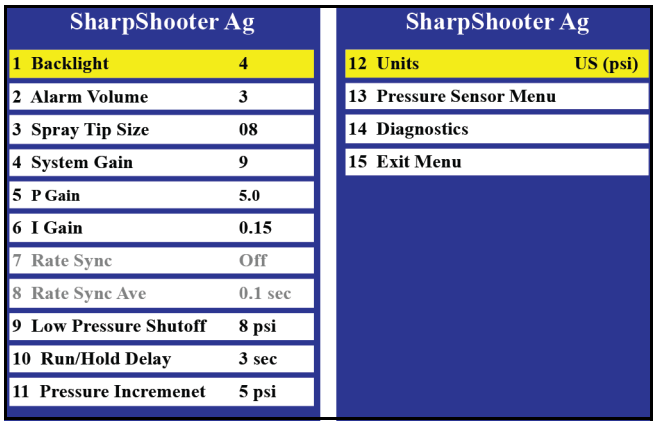

Figure 5

Press the **MENU** button to enter the desired selection.

To exit the main menu, **INCREASE** or **DECREASE** button to navigate to **Exit Menu**, then press the **MENU** button.

AUTO Button - **Manual Mode** is the default mode at power up. **Manual Mode** will pulse nozzle valves at the duty cycle percentage selected by the **INCREASE** or **DECREASE** button. **Manual Mode** is known as the rate controller only mode used in the event that the display fails to automatically control pressure. It is not necessary to change tips.

Manual Mode can also be used to close all nozzle valves by toggling down to 10% duty cycle, then pressing decrease once more. This will close all solenoids and the diagnostic readout will show as off.

NOTE: In the Manual Mode the increase / decrease buttons act like an electronic rotary nozzle body with an “infinite” number of tips that can be selected by the operator.

Auto Mode is the standard operating mode for SharpShooter® with Rate Sync®. Press the **AUTO** button, the LED light behind **AUTO** button will illuminate. The display will automatically work to maintain an operator set target pressure. It does this by pulsing the nozzle valves at a duty cycle percentage controlled by the target pressure.

NOTE: Upon powering up the display and pressing the **AUTO** button, the SharpShooter® with Rate Sync® will begin pulsing at 50% duty cycle. It will remain at 50% until the run-hold delay time has elapsed. At that time the display will begin to adjust the duty cycle to achieve the set pressure. This allows the flow control system to establish itself on initial power up before the display will regulate the pressure.

6.1.1 - Display Screen

[Figure 32] - The display screen shows a real time readout of the SharpShooter® with Rate Sync® system operation.

Actual pressure, effective tip size, and duty cycle are displayed in the **Manual Mode**. Actual pressure, target pressure and duty cycle appear in the **Auto Mode**. A diagnostics readout area appears in both modes.

Indicator Lights and Sounds - The display indicator lights are located behind the **POWER** button and **AUTO** button.

When the display is powered on, the indicator light behind the power button (1) will appear constant. This signals a properly operating system.

The indicator light (2) behind the **AUTO** button will be off when in **Manual Mode** (also read out in center of screen). When **Auto Mode** is selected, the indicator light will turn on and screen readout will change to show target pressure.

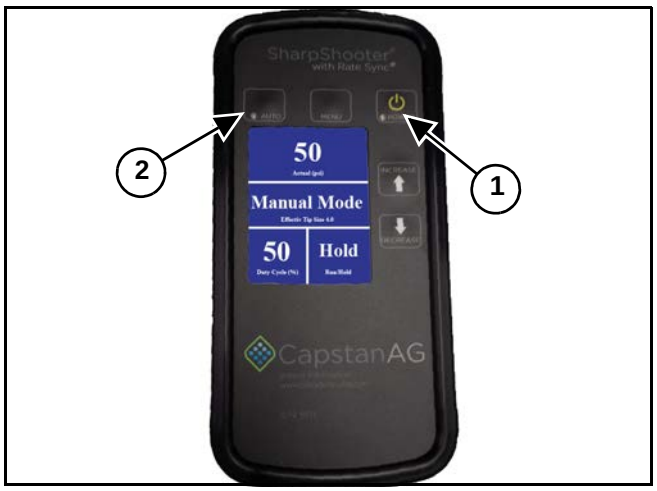

Figure 32

The display includes audible and visual alarms. The audible alarms are an accessible menu item. Visual alarms include a readout area in the lower right hand portion of the screen and a flashing light behind power button.

The alarm readout will appear and the power button light will flash once per second when the following appear:

1. Pressure Sensor Error - Present when there is no pressure acting on the sensor. Could also be pressure above or below the limits of the pressure sensor.
2. Minimum Duty Cycle - Shows when the minimum duty cycle value is experienced.
3. Maximum Duty Cycle - Shows when the maximum duty cycle value is experienced.
4. No GPS - Will Show when the Rate Sync® is functioning and no GPS values are being received by the display. This error will not show when the Rate Sync® is set to off.
5. No GPS VTG - Shows that the display is receiving some GPS signals but not the necessary VTG signal.
6. Low Pressure Shutoff - When the **Low Pressure Shutoff Menu** setting is 8 PSI, this readout will appear when the pressure drops below 8 PSI. At this point nozzle valves will close. Nozzle valves will open and the readout will clear when pressure increases to at least 12 PSI.

6.1.2 - Menu Screens

In each specific menu selection item screen, a default value and current value are both listed on the left side of the screen.

Range of selection parameters is called out on the bottom of the screen and selection choices are located on the right.

To choose a new parameter in any menu, scroll up/down with the arrow keys highlighting the desired selection, then press the menu button to exit that screen. Your selection will now be the value on the right side of the main menu screen.

Line 1 - Backlight

[Figure 33] - Backlight allows choices of LCD screen brightness and backlight behind the keypad for low light conditions.

Range: 1 - 5 (Dimmest to Brightest)

When selections 1 and 2 are active (low ambient light conditions) the display buttons become back-lit.

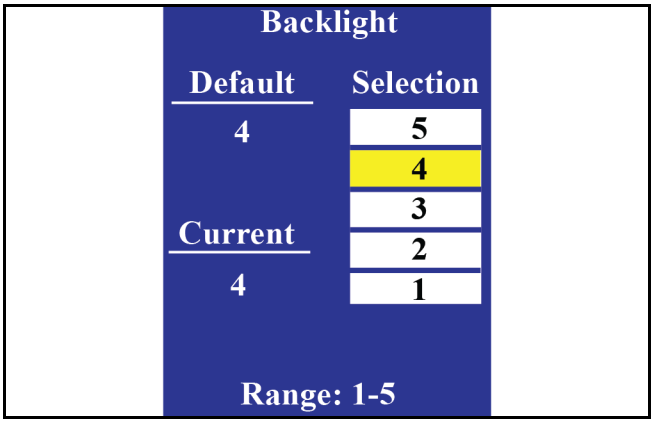

Figure 33

Line 2 - Alarm Volume

[Figure 34] - Alarm volume menu offers personalization of the alarm function. One can choose to deactivate the alarm or select a variety of volumes.

Range: 1 - 5 (Quiet to Loudest)

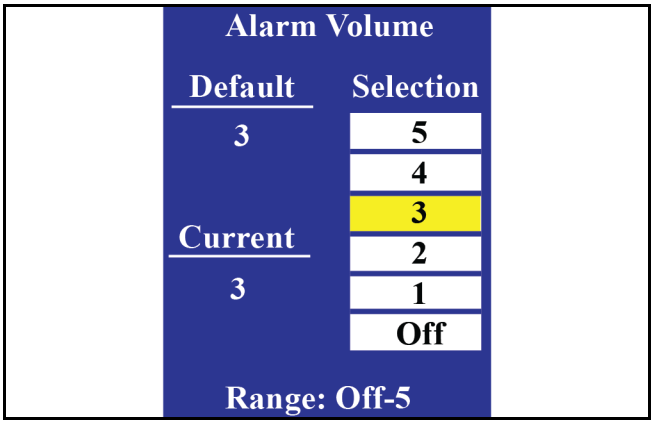

Figure 34

Line 3 - Spray Tip Size

[Figure 35] - It is important to choose your spray tip size in the display menu (2 pages) for the Rate Sync® to function properly.

Range: 01 - 20

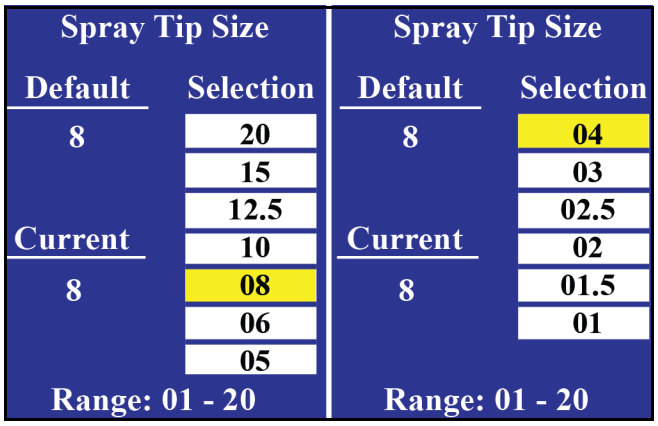

Figure 35

Line 4 - System Gain

[Figure 36] - System Gain is the first pressure control parameter in the display menu system. System gain changes the total response of system according to the same ratio between the individual P Gain and I Gain values. It is the first menu item to utilize when tuning the pressure control.

Increasing the system gain makes the SharpShooter® with Rate Sync® system react faster to pressure changes.

Decreasing the system gain makes SharpShooter® with Rate Sync® system react slower to pressure changes.

Range: 1 – 14 (slow to fast)

Recommended Starting Value = 9

System Gain		System Gain	
Default	Selection	Default	Selection
9	Fast	9	7
	13		6
	12		5
Current	11	Current	4
9	10	9	3
	9		2
	8		Slow
Range: 1 - 14		Range: 1 - 14	

Figure 36

Line 5 - P Gain

[Figure 37] - P (Proportional) gain is the second pressure tuning parameter in the display menu. Proportional gain determines the initial speed at which display drives the duty cycle toward the target value. Stabilize an oscillating system by selecting a lower number. Speed up a sluggish system by selecting a higher number.

Range: 2.0 – 8.5 (slow to fast)

Recommended Starting Value = 5

P Gain		P Gain	
Default	Selection	Default	Selection
5.0	5.0	5.0	5.0
	4.5		4.5
	4.0		4.0
Current	3.5	Current	3.5
5.0	3.0	5.0	3.0
	2.5		2.5
	2.0		2.0
Range: 2.0 - 8.5		Range: 2.0 - 8.5	

Figure 37

Line 6 - I Gain

[Figure 38] - I (Integral) Gain, the third pressure tuning parameter in the display, determines the acceleration driving duty cycle to the target value. To stabilize an oscillating system, use a lower number. To speed up a sluggish system, use a higher number.

Range: 0.05 – 0.35 (slow to fast)

Recommended Starting Value = 0.15

I Gain	
Default	Selection
0.15	0.35
	0.3
	0.25
Current	0.2
0.15	.15
	0.1
	0.05
Range: 0.05 - 0.35	

Figure 38

Line 7 - Rate Sync

[Figure 39] - Rate Sync® uses real time speed change to determine the proper duty cycle for the appropriate nozzle. It is used to make the SharpShooter® with Rate Sync® system react faster to speed changes.

NOTE: A 10 Hz NMEA GPS connection and VTG signal is required for Rate Sync to operate properly. If no 10 Hz NMEA GPS signal is available, the **Rate Sync** menu option should be set to **Off**.

Rate Sync® turned off disables speed change corrections. GPS connection is not needed with rate sync off.

Range: Off/Auto

Recommended Value = Auto

Rate Sync auto allows the SharpShooter® with Rate Sync® system to correct the pressure quicker during speed changes based on GPS data and automatically calculating the max speed based on tip size.

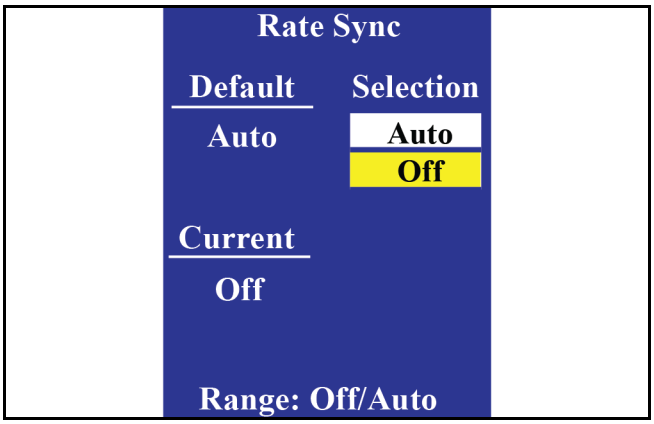

Figure 39

Line 8 - Rate Sync Ave

[Figure 40] - Rate Sync Ave is the time parameter used in rate sync calculations. Default setting of 0.1 second is recommended, higher settings cause rate sync to react slower.

Range: 0.1 - 0.5

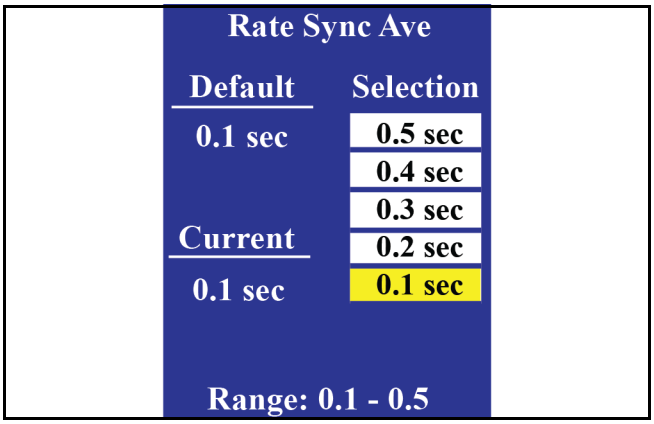

Figure 40

Line 9 - Low Pressure Shutoff

[Figure 41] - Low Pressure Shutoff allows the display to turn off the nozzle valves when the pressure decreases below 8 PSI. Thus this feature is intended to duplicate the effect of the nozzle drip checks found on sprayers. To alert the operator that the low pressure shutoff feature has been activated, low PSI shutoff will appear in the diagnostic readout area.

When the pressure rises above 12 PSI again, the display will pulse at 50% duty cycle for the start-up delay period and then will resume pressure control.

When set to the OFF position, the display will maintain a minimum duty cycle percentage, equal to the pulse frequency, regardless of either low or zero pressure.

Range: Off/8 PSI

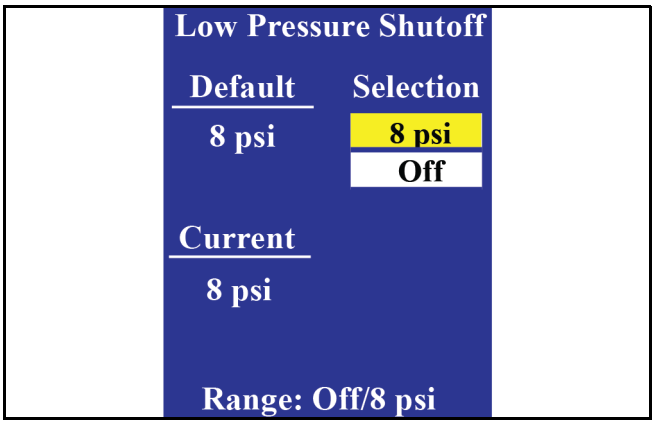

Figure 41

Line 10 - Run/Hold Delay

[Figure 42] - Run/Hold Delay is the delay at startup when display begins at a preset value (50% duty cycle) allowing for the rate controller to stabilize before making larger pressure control changes.

In **Auto Mode**, whenever the boom or all sections are toggled off, the display will store the duty cycle effective at that moment.

When the boom is turned on and the run / hold signal is returned, the display will begin to control pressure by first resuming the pulsing at the previous duty cycle before the boom was shutoff.

The **Hold** readout will show in the Diagnostics area, to alert the operator that the initialization delay has been activated. The start-up delay time is equal to the Run/Hold Delay time. This allows the flow control system to resume control and attain rate stability. Once the delay period has elapsed, the display will resume pressure control.

The diagnostic readout area will read **Hold** and count down the seconds to alert the operator that the Run/hold Delay has been activated. When the hold count down is finished, the display will read **Run** in diagnostics area. At this point the display is controlling pressure once again.

Range: 0 - 6

Default value of 3 seconds is recommended. Increasing the value allows more time for the rate to stabilize before the SharpShooter® with Rate Sync® pressure control activates.

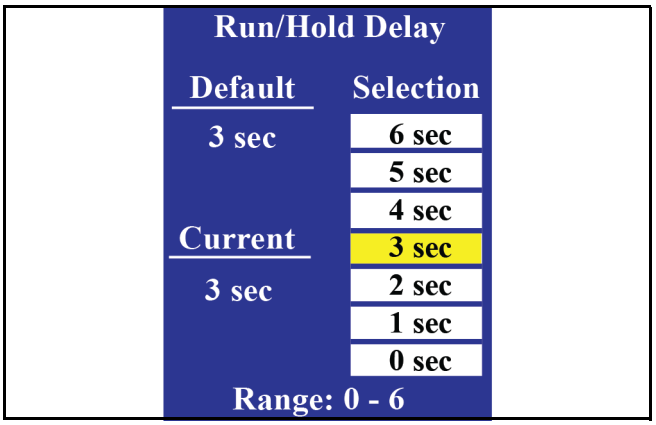

Figure 42

Line 11 - Pressure Increment

[Figure 43] - Pressure Increment allows the operator to choose the pressure increment per toggle of the **INCREASE** or **DECREASE** button in **Auto Mode**.

Range: 1 - 10

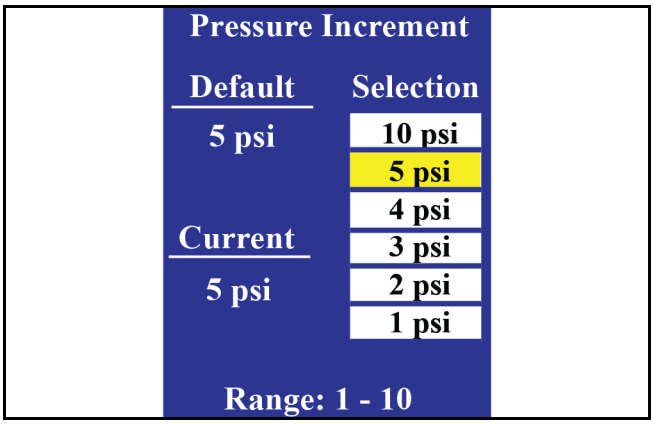

Figure 43

Line 12 - Units

[Figure 44] - The Units menu consists of three choices for the display pressure units.

Range: US, SI

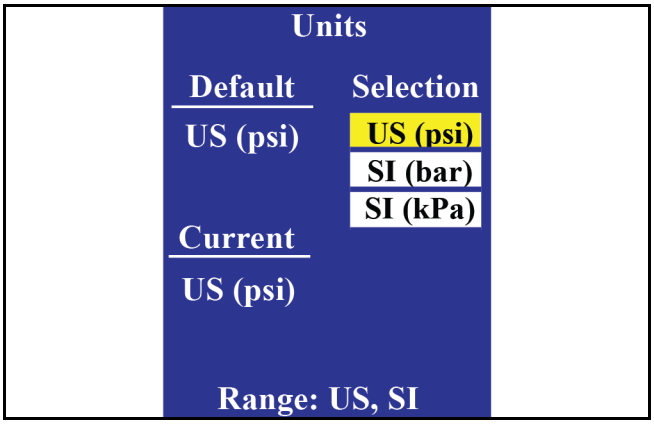

Figure 44

Line 13 - Pressure Sensor Menu

[Figure 45] - PSI Sensor Menu consists of pressure sensor specific parameters. Entering the **Sensor offset** and the **Sensor volt min** allows you to select appropriate equipment settings. **Sensor volt max**, **Sensor pressure min** and **Sensor pressure max** are readouts for diagnostic purposes.

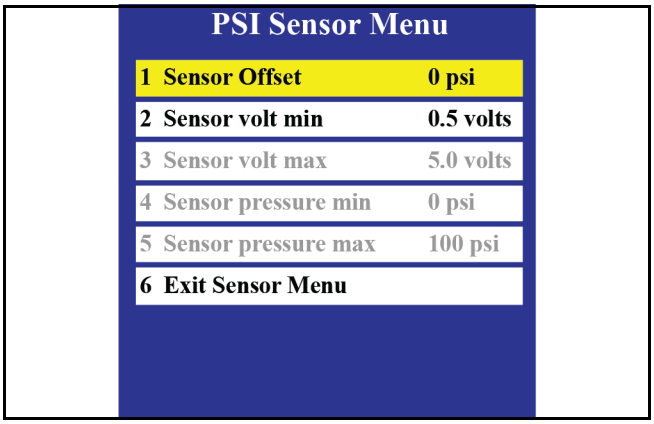

Figure 45

Sensor PSI Offset

[Figure 46] - Manipulate this setting if a difference in the pressure is noticed across separate pressure sensors, such as between the display pressure reading and the rate controller pressure display from a secondary pressure sensor.

NOTE: SharpShooter® with Rate Sync® system requires a greater quality pressure sensor relative to pressure sensors which just report a screen value. So in most cases the adjustment will be correcting the value to the least accurate sensor.

Range: 10 to -10

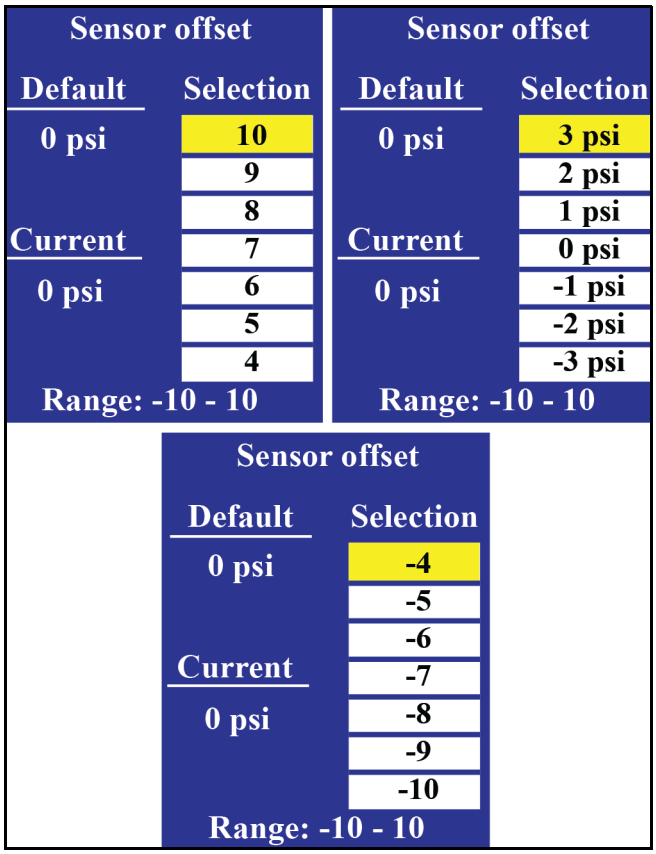

Figure 46

Sensor Volt Min

[Figure 47] - CapstanAG™ PSI Sensors need no change from default value of 0.5. Set appropriately if using a 1.0 - 5.0 volt PSI sensor.

Range: 0.5 to -1.0

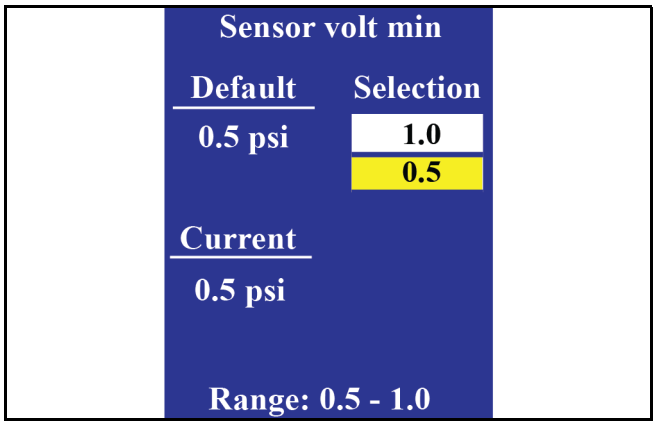

Figure 47

Line 14 - Diagnostics

[Figure 48] - Diagnostics menu is a readout for set parameters in the SharpShooter® with Rate Sync® system. These may be useful in troubleshooting and/or diagnostic purposes.

NOTE: These parameters cannot be changed.

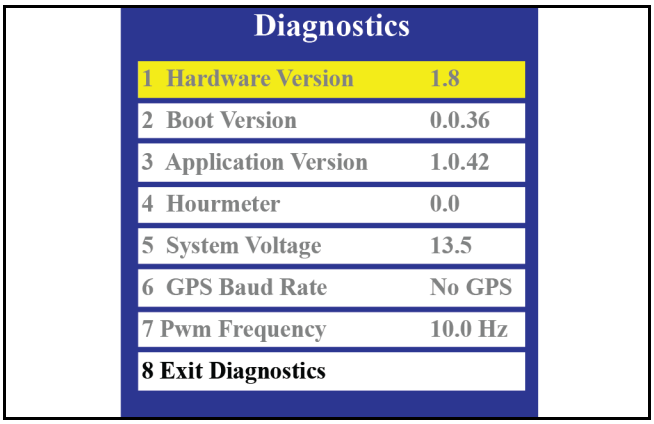

Figure 48

Line 15 - Exit Menu

[Figure 49] - Use this line item to exit the main menu structure. Toggle the increase/decrease buttons highlighting the Exit Menu field, then press Menu button. This is necessary since the Menu button doubles as enter and exit functions.

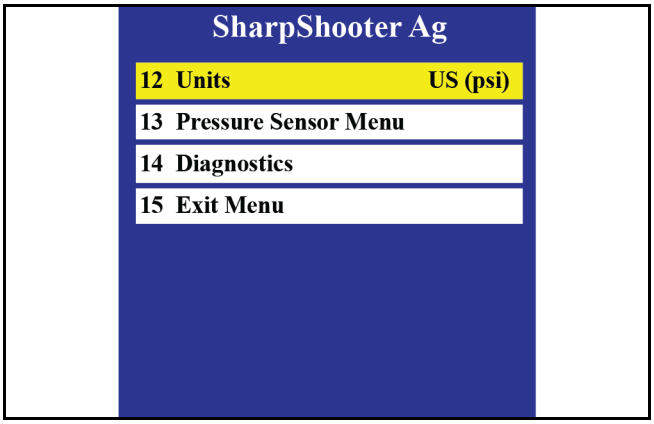

Figure 49

6.2 - SharpShooter® with Rate Sync® Operation Objectives

The SharpShooter® with Rate Sync® system is especially useful in solving three basic spraying challenges that result from conventional rate controller spraying:

Solving Challenge 1: Excessive Spray Drift at High Rates and / or Speeds

Select the appropriate spray tip size, style and pressure for the application rate and maximum field speed and level to reach the desired spray drift control. For typical infield spraying, select the display **Auto mode** and adjust the increase/decrease buttons to the desired spray pressure and droplet pattern. For on-the-go drift control, switch target pressure to the minimum pressure that the tip is rated for, (typically 25 psi). The display will adjust the nozzle pulsing to the lower pressure to reduce drift while still maintaining the proper rate. Although the top end speed range might decrease slightly, the SharpShooter® with Rate Sync® system still maintains an impressive speed range at the lower set pressure. When the drift control is no longer necessary, simply switch the target pressure back to the higher pressure.

Solving Challenge 2: Inconsistent Application over Wide Speed Ranges

Select the appropriate spray tip size, style and pressure to achieve a consistent application up to a maximum speed range of 8:1 or with frequent speed changes. Select the **Auto mode** on display and adjust the target pressure to the desired spray pressure. When slowing down, the display will adjust the nozzle pulsing to keep the operator pressure set-point constant. The same happens when speeding up. The SharpShooter® with Rate Sync® system will maintain the desired spray pressure up to an 8:1 speed range by adjusting the nozzle pulsing to maintain the constant pressure set by the operator.

Solving Challenge 3: Limited Variable Rate Application Ranges

Typically, chemical rates vary within a 2:1 rate range. To achieve that range of application rate with a single tip, select the appropriate spray tip size, style and pressure for the coverage desired at the highest application rate and fastest speed. Select the display **Auto mode** and then choose the desired target spray pressure. When changing rates, the display will adjust the nozzle pulsing to permit the rate range of flow to change while still maintaining a constant spray pressure.

6.3 - Spraying Without the SharpShooter® with Rate Sync® System

The SharpShooter® with Rate Sync® system has been designed with several features that allow the operator to continue spraying in the event of a SharpShooter® with Rate Sync® or rate controller component failure.

When the SSRS Display will not automatically control pressure but still pulses:

- With the pulsing still functioning, turning the display to the **Manual mode** returns the operator to traditional rate controller functionality.
- In this case the **Manual mode** acts like an electronic rotary nozzle body, but with an unlimited number of tip choices. Instead of rotating a 3-way or 5-way nozzle body on the back of the boom, the operator manually arrows the duty cycle up or down to change the effective tip size as displayed on the screen. If the pressure goes too high, the operator arrows up to a larger tip. If the pressure is too low, the operator arrows down to a smaller tip.
- The **Manual mode** is typically used in the event of a SharpShooter® with Rate Sync® pressure sensor failure. The **Manual mode** will allow the operator to adjust the pressure range in which the rate controller operates. This pressure range can be changed on-the-go for varying spray conditions.

When the SSRS Display does not automatically control pressure and does not pulse:

- Turning the display off also returns the operator to the traditional rate controller mode.

NOTE: This allows the operator to disable the pulsing of the valves. Pulsing may not be desired for row banding, drop nozzles, special applications, maintenance, troubleshooting, or in the event of a system failure.

The Close selection allows the operator to disable the pulsing of the valves for maintenance, troubleshooting, or in the event of system failure.

The Open selection locks the solenoids open, if desired, for row banding, drop nozzles and special applications.

- A conventional tip chart will be needed to select a proper tip based on pressure and rate. The SharpShooter® with Rate Sync® nozzle solenoids are still powered and will act as electronic “drip checks” and work with the boom section On/Off switches. This feature will allow the operator to continue spraying until repairs can be made.

When the Rate Controller or flow meter fails, and the SharpShooter® with Rate Sync® continues to pulse:

- Put the rate controller in the **Manual mode**. This locks the flow control valve to a single position and eliminates the need for the flow meter and control valve.
- Put the display in the **Manual mode**. This locks in a tip size chosen by the operator. The tip size can be manually changed to select the tip needed.

NOTE: This option allows the operator to easily revert back to a Speed and Pressure mode of application without having to change the existing tips installed on the sprayer.

- Referencing conventional tip charts, the operator selects a single speed (typically 3 MPH) and an operating pressure (typically 40 PSI). The operator would then select a tip size that would deliver the desired rate at 3 MPH and 40 PSI.

- To select the right tip, start spraying at 3 MPH. Arrow the displays duty cycle up or down until the machine is spraying at 40 PSI. This duty cycle is then the effective tip size needed to achieve the desire rate at 40 PSI and 3 MPH.
- The operator must continue to spray only at 3 MPH to maintain the target rate.
- The operator will need to do a test run, checking the volume and area applied. Dividing the volume by the area will serve to verify the rate. It may be necessary to modify the tip size or speed to achieve the desired rate.

6.4 - Tip Selection and Capacities

It is important to adhere to the following rules:

1. Always use 110° spray angle tips, maintain a minimum boom height of 21 in, with 24 in the preferred height above the grass. However if 80° spray angle tips are used, maintain the boom height at 36” in or greater.
2. Never use Air Induction (AI) spray tips.

- The SharpShooter® with Rate Sync® pulsing tends to squirt liquid out of the air holes of the AI tips.
- While AI tips are a good solution to the drift control challenges of rate controller spraying, the need for them is offset by the advancement of SharpShooter® with Rate Sync® and non-AI pre-orifice tips.

6.5 - Nozzle Speed Range (MPH) - 15” Nozzle Spacing

Speed Range (MPH) - 15" Nozzle Spacing

Tip Size	Gauge (PSI)	3 GPA				5 GPA				8 GPA				10 GPA				12 GPA				15 GPA				20 GPA			
		Min	-		Max	Min	-		Max	Min	-		Max	Min	-		Max	Min	-		Max	Min	-		Max	Min	-		Max
		25%	50%	75%	100%	25%	50%	75%	100%	25%	50%	75%	100%	25%	50%	75%	100%	25%	50%	75%	100%	25%	50%	75%	100%	25%	50%	75%	100%
0.1 GPM #1	20	2	5	7	9	1	3	4	6	1	2	3	3	1	1	2	3	1	1	2	2	0	1	1	2	0	1	1	1
	30	3	6	9	11	2	3	5	7	1	2	3	4	1	2	3	3	1	1	2	3	1	1	2	2	0	1	1	2
	40	3	7	10	13	2	4	6	8	1	2	4	5	1	2	3	4	1	2	2	3	1	1	2	3	0	1	1	2
	50	4	7	11	15	2	4	7	9	1	3	4	6	1	2	3	4	1	2	3	4	1	1	2	3	1	1	2	2
	60	4	8	12	16	2	5	7	10	2	3	5	6	1	2	4	5	1	2	3	4	1	2	2	3	1	1	2	2
	70	4	9	13	17	3	5	8	10	2	3	5	7	1	3	4	5	1	2	3	4	1	2	3	3	1	1	2	3
0.15 GPM #1.5	20	3	7	10	14	2	4	6	8	1	3	4	5	1	2	3	4	1	2	3	3	1	1	2	3	1	1	2	2
	30	4	9	13	17	3	5	8	10	2	3	5	6	1	3	4	5	1	2	3	4	1	2	3	3	1	1	2	3
	40	5	10	15	20	3	6	9	12	2	4	6	7	1	3	4	6	1	2	4	5	1	2	3	4	1	1	2	3
	50	6	11	17	22	3	7	10	13	2	4	6	8	2	3	5	7	1	3	4	6	1	2	3	4	1	2	2	3
	60	6	12	18	24	4	7	11	14	2	5	7	9	2	4	5	7	2	3	5	6	1	2	4	5	1	2	3	4
	70	7	13	20	26	4	8	12	16	2	5	7	10	2	4	6	8	2	3	5	7	1	3	4	5	1	2	3	4
0.2 GPM #2	20	5	9	14	19	3	6	8	11	2	3	5	7	1	3	4	6	1	2	3	5	1	2	3	4	1	1	2	3
	30	6	11	17	23	3	7	10	14	2	4	6	9	2	3	5	7	1	3	4	6	1	2	3	5	1	2	3	3
	40	7	13	20	26	4	8	12	16	2	5	7	10	2	4	6	8	2	3	5	7	1	3	4	5	1	2	3	4
	50	7	15	22	29	4	9	13	18	3	5	8	11	2	4	7	9	2	4	5	7	1	3	4	6	1	2	3	4
	60					5	10	14	19	3	6	9	12	2	5	7	10	2	4	6	8	2	3	5	6	1	2	4	5
	70					5	10	16	21	3	6	10	13	3	5	8	10	2	4	6	9	2	3	5	7	1	3	4	5
0.25 GPM #2.5	20	6	12	17	23	3	7	10	14	2	4	6	9	2	3	5	7	1	3	4	6	1	2	3	5	1	2	3	3
	30	7	14	21	28	4	8	13	17	3	5	8	11	2	4	6	8	2	4	5	7	1	3	4	6	1	2	3	4
	40					5	10	15	20	3	6	9	12	2	5	7	10	2	4	6	8	2	3	5	7	1	2	4	5
	50					5	11	16	22	3	7	10	14	3	5	8	11	2	5	7	9	2	4	5	7	1	3	4	5
	60					6	12	18	24	4	7	11	15	3	6	9	12	2	5	7	10	2	4	6	8	1	3	4	6
	70					6	13	19	26	4	8	12	16	3	6	10	13	3	5	8	11	2	4	6	9	2	3	5	6
0.3 GPM #3	20	7	14	21	27	4	8	12	16	3	5	8	10	2	4	6	8	2	3	5	7	1	3	4	5	1	2	3	4
	30					5	10	15	20	3	6	9	13	3	5	8	10	2	4	6	8	2	3	5	7	1	3	4	5
	40					6	12	17	23	4	7	11	15	3	6	9	12	2	5	7	10	2	4	6	8	1	3	4	6
	50					7	13	20	26	4	8	12	16	3	7	10	13	3	5	8	11	2	4	7	9	2	3	5	7
	60					7	14	21	29	4	9	13	18	4	7	11	14	3	6	9	12	2	5	7	10	2	4	5	7
	70									5	10	14	19	4	8	12	15	3	6	10	13	3	5	8	10	2	4	6	8
0.4 GPM #4	20					5	11	16	22	3	7	10	14	3	5	8	11	2	5	7	9	2	4	5	7	1	3	4	5
	30					7	13	20	27	4	8	12	17	3	7	10	13	3	6	8	11	2	4	7	9	2	3	5	7
	40									5	10	14	19	4	8	12	15	3	6	10	13	3	5	8	10	2	4	6	8
	50									5	11	16	21	4	9	13	17	4	7	11	14	3	6	9	11	2	4	6	9
	60									6	12	18	23	5	9	14	19	4	8	12	16	3	6	9	13	2	5	7	9
	70									6	13	19	25	5	10	15	20	4	8	13	17	3	7	10	14	3	5	8	10
0.5 GPM #5	20					7	13	20	27	4	8	12	17	3	7	10	13	3	6	8	11	2	4	7	9	2	3	5	7
	30									5	10	15	20	4	8	12	16	3	7	10	14	3	5	8	11	2	4	6	8
	40									6	12	18	24	5	9	14	19	4	8	12	16	3	6	9	13	2	5	7	9
	50									7	13	20	26	5	11	16	21	4	9	13	18	4	7	11	14	3	5	8	11
	60									7	14	22	29	6	12	17	23	5	10	14	19	4	8	12	15	3	6	9	12
	70													6	12	19	25	5	10	16	21	4	8	12	17	3	6	9	12

Speed Range (MPH) - 15" Nozzle Spacing

Tip Size	Gauge (PSI)	3 GPA				5 GPA				8 GPA				10 GPA				12 GPA				15 GPA				20 GPA			
		Min	-		Max	Min	-		Max	Min	-		Max	Min	-		Max	Min	-		Max	Min	-		Max	Min	-		Max
		25%	50%	75%	100%	25%	50%	75%	100%	25%	50%	75%	100%	25%	50%	75%	100%	25%	50%	75%	100%	25%	50%	75%	100%	25%	50%	75%	100%
0.6 GPM #6	20									5	10	15	20	4	8	12	16	3	7	10	13	3	5	8	10	2	4	6	8
	30									6	12	18	24	5	10	14	19	4	8	12	16	3	6	10	13	2	5	7	10
	40									7	14	21	28	6	11	17	22	5	9	14	18	4	7	11	15	3	6	8	11
	50													6	12	19	25	5	10	15	21	4	8	12	17	3	6	9	12
	60													7	14	20	27	6	11	17	23	5	9	14	18	3	7	10	14
	70													7	15	22	29	6	12	18	24	5	10	15	20	4	7	11	15
0.8 GPM #8	20									6	12	19	25	5	10	15	20	4	8	12	17	3	7	10	13	2	5	7	10
	30									8	15	23	30	6	12	18	24	5	10	15	20	4	8	12	16	3	6	9	12
	40													7	14	21	28	6	12	18	23	5	9	14	19	4	7	11	14
	50																	7	13	20	26	5	10	16	21	4	8	12	16
	60																	7	14	22	29	6	11	17	23	4	9	13	17
	70																					6	12	19	25	5	9	14	19
1.0 GPM #10	20									7	15	22	29	6	12	18	24	5	10	15	20	4	8	12	16	3	6	9	12
	30													7	14	22	29	6	12	18	24	5	10	14	19	4	7	11	14
	40																	7	14	21	28	6	11	17	22	4	8	12	17
	50																					6	12	19	25	5	9	14	19
	60																					7	14	20	27	5	10	15	20
	70																					7	15	22	29	6	11	17	22
1.2 GPM #12	20																	6	11	17	22	4	9	13	18	3	7	10	13
	30																	7	14	20	27	5	11	16	22	4	8	12	16
	40																					6	13	19	25	5	9	14	19
	50																					7	14	21	28	5	11	16	21
	60																									6	12	17	23
	70																									6	12	19	25
1.25 GPM #12.5	20																												
	30																	7	14	21	28	6	11	17	22	4	8	13	17
	40																					6	13	19	26	5	10	14	19
	50																					7	14	22	29	5	11	16	22
	60																									6	12	18	24
	70																									6	13	19	25
1.5 GPM #15	20																												
	30																					6	12	18	25	5	9	14	18
	40																					7	14	21	28	5	11	16	21
	50																									6	12	18	24
	60																									7	13	20	26
	70																									7	14	21	28

6.6 - Nozzle Speed Range (MPH) - 20” Nozzle Spacing

Speed Range (MPH) - 20" Nozzle Spacing

Tip Size	Gauge (PSI)	3 GPA				5 GPA				8 GPA				10 GPA				12 GPA				15 GPA				20 GPA			
		Min	-		Max	Min	-		Max	Min	-		Max	Min	-		Max	Min	-		Max	Min	-		Max	Min	-		Max
		25%	50%	75%	100%	25%	50%	75%	100%	25%	50%	75%	100%	25%	50%	75%	100%	25%	50%	75%	100%	25%	50%	75%	100%	25%	50%	75%	100%
0.1 GPM #1	20	2	3	5	7	1	2	3	4	1	1	2	3	1	1	2	2	0	1	1	2	0	1	1	1	0	1	1	1
	30	2	4	6	9	1	3	4	5	1	2	2	3	1	1	2	3	1	1	2	2	0	1	1	2	0	1	1	1
	40	2	5	7	10	1	3	4	6	1	2	3	4	1	1	2	3	1	1	2	2	0	1	1	2	0	1	1	1
	50	3	6	8	11	2	3	5	7	1	2	3	4	1	2	2	3	1	1	2	3	1	1	2	2	0	1	1	2
	60	3	6	9	12	2	4	5	7	1	2	3	5	1	2	3	4	1	2	2	3	1	1	2	2	0	1	1	2
	70	3	7	10	13	2	4	6	8	1	2	4	5	1	2	3	4	1	2	2	3	1	1	2	3	0	1	1	2
0.15 GPM #1.5	20	3	5	8	10	2	3	5	6	1	2	3	4	1	2	2	3	1	1	2	3	1	1	2	2	0	1	1	2
	30	3	6	10	13	2	4	6	8	1	2	4	5	1	2	3	4	1	2	2	3	1	1	2	3	0	1	1	2
	40	4	7	11	15	2	4	7	9	1	3	4	6	1	2	3	4	1	2	3	4	1	1	2	3	1	1	2	2
	50	4	8	12	17	2	5	7	10	2	3	5	6	1	2	4	5	1	2	3	4	1	2	2	3	1	1	2	2
	60	5	9	14	18	3	5	8	11	2	3	5	7	1	3	4	5	1	2	3	5	1	2	3	4	1	1	2	3
	70	5	10	15	20	3	6	9	12	2	4	5	7	1	3	4	6	1	2	4	5	1	2	3	4	1	1	2	3
0.2 GPM #2	20	3	7	10	14	2	4	6	8	1	3	4	5	1	2	3	4	1	2	3	3	1	1	2	3	1	1	2	2
	30	4	9	13	17	3	5	8	10	2	3	5	6	1	3	4	5	1	2	3	4	1	2	3	3	1	1	2	3
	40	5	10	15	20	3	6	9	12	2	4	6	7	1	3	4	6	1	2	4	5	1	2	3	4	1	1	2	3
	50	5	11	16	22	3	7	10	13	2	4	6	8	2	3	5	7	1	3	4	5	1	2	3	4	1	2	2	3
	60	6	12	18	24	4	7	11	14	2	5	7	9	2	4	5	7	2	3	5	6	1	2	4	5	1	2	3	4
	70	6	13	19	26	4	8	12	16	2	5	7	10	2	4	6	8	2	3	5	6	1	3	4	5	1	2	3	4
0.25 GPM #2.5	20	4	9	13	17	3	5	8	10	2	3	5	6	1	3	4	5	1	2	3	4	1	2	3	3	1	1	2	3
	30	5	11	16	21	3	6	10	13	2	4	6	8	2	3	5	6	1	3	4	5	1	2	3	4	1	2	2	3
	40	6	12	18	24	4	7	11	15	2	5	7	9	2	4	5	7	2	3	5	6	1	2	4	5	1	2	3	4
	50	7	14	20	27	4	8	12	16	3	5	8	10	2	4	6	8	2	3	5	7	1	3	4	5	1	2	3	4
	60	7	15	22	30	4	9	13	18	3	6	8	11	2	4	7	9	2	4	6	7	1	3	4	6	1	2	3	4
	70					5	10	15	19	3	6	9	12	2	5	7	10	2	4	6	8	2	3	5	6	1	2	4	5
0.3 GPM #3	20	5	10	15	21	3	6	9	12	2	4	6	8	2	3	5	6	1	3	4	5	1	2	3	4	1	2	2	3
	30	6	13	19	25	4	8	11	15	2	5	7	9	2	4	6	8	2	3	5	6	1	3	4	5	1	2	3	4
	40	7	15	22	29	4	9	13	17	3	5	8	11	2	4	7	9	2	4	5	7	1	3	4	6	1	2	3	4
	50					5	10	15	20	3	6	9	12	2	5	7	10	2	4	6	8	2	3	5	7	1	2	4	5
	60					5	11	16	21	3	7	10	13	3	5	8	11	2	4	7	9	2	4	5	7	1	3	4	5
	70					6	12	17	23	4	7	11	14	3	6	9	12	2	5	7	10	2	4	6	8	1	3	4	6
0.4 GPM #4	20	7	14	20	27	4	8	12	16	3	5	8	10	2	4	6	8	2	3	5	7	1	3	4	5	1	2	3	4
	30					5	10	15	20	3	6	9	12	2	5	7	10	2	4	6	8	2	3	5	7	1	2	4	5
	40					6	12	17	23	4	7	11	14	3	6	9	12	2	5	7	10	2	4	6	8	1	3	4	6
	50					6	13	19	26	4	8	12	16	3	6	10	13	3	5	8	11	2	4	6	9	2	3	5	6
	60					7	14	21	28	4	9	13	18	4	7	11	14	3	6	9	12	2	5	7	9	2	4	5	7
	70					8	15	23	30	5	10	14	19	4	8	11	15	3	6	10	13	3	5	8	10	2	4	6	8
0.5 GPM #5	20					5	10	15	20	3	6	9	12	2	5	7	10	2	4	6	8	2	3	5	7	1	2	4	5
	30					6	12	18	24	4	8	11	15	3	6	9	12	3	5	8	10	2	4	6	8	2	3	5	6
	40					7	14	21	28	4	9	13	18	4	7	11	14	3	6	9	12	2	5	7	9	2	4	5	7
	50									5	10	15	20	4	8	12	16	3	7	10	13	3	5	8	11	2	4	6	8
	60									5	11	16	22	4	9	13	17	4	7	11	14	3	6	9	12	2	4	6	9
	70									6	12	18	23	5	9	14	19	4	8	12	16	3	6	9	12	2	5	7	9

Speed Range (MPH) - 20" Nozzle Spacing

Tip Size	Gauge (PSI)	3 GPA				5 GPA				8 GPA				10 GPA				12 GPA				15 GPA				20 GPA			
		Min - Max				Min - Max				Min - Max				Min - Max				Min - Max				Min - Max				Min - Max			
		25%	50%	75%	100%	25%	50%	75%	100%	25%	50%	75%	100%	25%	50%	75%	100%	25%	50%	75%	100%	25%	50%	75%	100%	25%	50%	75%	100%
0.6 GPM #6	20					6	12	18	24	4	7	11	15	3	6	9	12	2	5	7	10	2	4	6	8	1	3	4	6
	30					7	14	22	29	4	9	13	18	4	7	11	14	3	6	9	12	2	5	7	10	2	4	5	7
	40									5	10	16	21	4	8	12	17	3	7	10	14	3	6	8	11	2	4	6	8
	50									6	12	17	23	5	9	14	19	4	8	12	15	3	6	9	12	2	5	7	9
	60									6	13	19	25	5	10	15	20	4	8	13	17	3	7	10	14	3	5	8	10
	70									7	14	21	27	5	11	16	22	5	9	14	18	4	7	11	15	3	5	8	11
0.8 GPM #8	20					7	15	22	30	5	9	14	19	4	7	11	15	3	6	9	12	2	5	7	10	2	4	6	7
	30									6	11	17	23	5	9	14	18	4	8	11	15	3	6	9	12	2	5	7	9
	40									7	13	20	26	5	11	16	21	4	9	13	18	4	7	11	14	3	5	8	11
	50									7	15	22	30	6	12	18	24	5	10	15	20	4	8	12	16	3	6	9	12
	60													6	13	19	26	5	11	16	22	4	9	13	17	3	6	10	13
	70													7	14	21	28	6	12	17	23	5	9	14	19	3	7	10	14
1.0 GPM #10	20									6	11	17	22	4	9	13	18	4	7	11	15	3	6	9	12	2	4	7	9
	30									7	14	20	27	5	11	16	22	5	9	14	18	4	7	11	14	3	5	8	11
	40													6	12	19	25	5	10	16	21	4	8	12	17	3	6	9	12
	50													7	14	21	28	6	12	17	23	5	9	14	19	3	7	10	14
	60																	6	13	19	25	5	10	15	20	4	8	11	15
	70																	7	14	21	28	6	11	17	22	4	8	12	17
1.2 GPM #12	20									6	12	19	25	5	10	15	20	4	8	12	17	3	7	10	13	2	5	7	10
	30													6	12	18	24	5	10	15	20	4	8	12	16	3	6	9	12
	40													7	14	21	28	6	12	18	23	5	9	14	19	4	7	11	14
	50																	7	13	20	26	5	11	16	21	4	8	12	16
	60																	7	14	22	29	6	12	17	23	4	9	13	17
	70																					6	12	19	25	5	9	14	19
1.25 GPM #12.5	20																												
	30									8	16	23	31	6	13	19	25	5	10	16	21	4	8	13	17	3	6	9	13
	40													7	14	22	29	6	12	18	24	5	10	14	19	4	7	11	14
	50																	7	13	20	27	5	11	16	22	4	8	12	16
	60																	7	15	22	29	6	12	18	24	4	9	13	18
	70																					6	13	19	25	5	10	14	19
1.5 GPM #15	20																												
	30													7	14	21	28	6	12	17	23	5	9	14	18	3	7	10	14
	40																	7	13	20	27	5	11	16	21	4	8	12	16
	50																	7	15	22	30	6	12	18	24	4	9	13	18
	60																					7	13	20	26	5	10	15	20
	70																					7	14	21	28	5	11	16	21

6.7 - Blended Pulse Droplet Classification Table - U.S.

Droplet Classification Table ASABE S-572.1

Extremely Fine (EF)	Very Fine (VF)	Fine (F)	Medium (M)	Coarse (C)	Very Coarse (VC)	Extremely Coarse (EC)	Ultra Coarse (UC)
<50	50 - 136	137-177	178-218	219-349	350-428	429-622	>622

*** Blanks cells represent nozzles either not available or below the manufacturers operating specifications*

*** Hypro and TeeJet droplet classifications below may not match manufacturers spec sheets. The chart below adjusts the droplet classification to be representative of the Actual Nozzle Pressure*

Tip Size	Gauge PSI	Nozzle PSI	Wilger				Hypro						TeeJet							
			ER (110°)	SR (110°)	MR (110°)	DR (110°)	HF (140°)	GRD (120°)	LD (110°)	VP (110°)	TR (110°)	F (110°)	TTJ60 (110°)	XR (110°)	XRC (110°)	DG (110°)	TJ60 (110°)	DGTJ60 (110°)	TT (110°)	TP (110°)
0.1 GPM #1	20	20	F											F					C	
	30	30	F									F		F					M	F
	40	40	VF									F		F					M	F
	50	50	VF									F		F					M	F
	60	60	VF									VF		VF					F	VF
	70	70	VF																F	
0.15 GPM #1.5	20	20	F											F					C	
	30	30	F	M	C	VC						F		F		M		F	M	F
	40	40	F	M	C	C						F		F		F		F	M	F
	50	50	VF	M	C	C						F		F		F		F	M	F
	60	59	VF	M	C	C						F		F		F		F	F	F
	70	69	VF	F	M	C													F	
0.2 GPM #2	20	20	F					M	M	F	M		C	M	F				VC	
	30	30	F	C	C	XC		M	M	F	F	F	C	F	F	M	F	M	C	F
	40	39	F	M	C	VC		M	M	F	F	F	M	F	F	M	VF	M	M	F
	50	49	F	M	C	VC		M	M	F	F	F	M	F	F	M	VF	F	M	F
	60	59	F	M	C	C		M	M	F	F	F	M	F	F	M	VF	F	M	F
	70	69	VF	M	C	C		F	M	F	F		M						F	
0.25 GPM #2.5	20	19	M					M	M	M			VC	M	M				VC	
	30	29	M	C	VC	XC		M	M	F			C	M	F				C	
	40	39	M	C	C	VC		M	M	F			C	F	F				M	
	50	49	F	M	C	VC		M	M	F			M	F	F				M	
	60	58	F	M	C	VC		M	M	F			M	F	F				M	
	70	68	F	M	C	C		F	M	F			M						F	
0.3 GPM #3	20	19	M					M	C	M	M		VC	M	M				VC	
	30	29	M	C	VC	XC		M	C	F	M	F	C	M	F	C	F	M	C	F
	40	39	F	C	VC	XC		M	M	F	F	F	C	F	F	M	F	M	C	F
	50	48	F	C	C	VC		M	M	F	F	F	M	F	F	M	F	F	M	F
	60	58	F	C	C	VC		M	M	F	F	F	M	F	F	M	F	F	M	F
	70	67	F	C	C	VC		M	M	F	F		M						M	
0.4 GPM #4	20	19	C					C	C	M	M		VC	M	M				VC	
	30	28	C	C	VC	XC		C	C	M	M	M	C	M	M	C	F	C	C	M
	40	38	M	C	VC	XC		C	M	F	F	F	C	M	M	M	F	C	C	M
	50	47	M	C	VC	XC		M	M	F	F	F	M	F	F	M	F	C	M	F
	60	56	M	C	C	VC		M	M	F	F	F	M	F	F	M	F	M	M	F
	70	66	M	C	C	VC		M	M	F	F		M						M	
0.5 GPM #5	20	18	C					C	C	M	C		VC	M	M				VC	
	30	27	C	VC	XC	XC		C	C	M	M	M	C	M	M	C	M		VC	M
	40	36	M	C	XC	XC		C	C	F	F	F	C	M	M	C	M		C	M
	50	45	M	C	XC	XC		M	M	F	F	F	C	M	M	M	F		C	F
	60	54	M	C	VC	XC		M	M	F	F	F	C	F	F	M	F		C	F
	70	63	M	C	VC	XC		M	M	F	F		M						M	

Droplet Classification Table ASABE S-572.1

Extremely Fine (EF)	Very Fine (VF)	Fine (F)	Medium (M)	Coarse (C)	Very Coarse (VC)	Extremely Coarse (EC)	Ultra Coarse (UC)
<50	50 - 136	137-177	178-218	219-349	350-428	429-622	>622

*** Blanks cells represent nozzles either not available or below the manufacturers operating specifications*

*** Hypro and TeeJet droplet classifications below may not match manufacturers spec sheets. The chart below adjusts the droplet classification to be representative of the Actual Nozzle Pressure*

Tip Size	Gauge PSI	Nozzle PSI	Wilger				Hypro						TeeJet							
			ER (110°)	SR (110°)	MR (110°)	DR (110°)	HF (140°)	GRD (120°)	LD (110°)	VP (110°)	TR (110°)	F (110°)	TTJ60 (110°)	XR (110°)	XRC (110°)	DG (110°)	TJ60 (110°)	DGTJ60 (110°)	TT (110°)	TP (110°)
0.6 GPM #6	20	17	C					VC	VC	M	C		VC	M	C				VC	
	30	26	C	XC	XC			C	C	M	C	M	C	M	M		M	C	VC	M
	40	35	C	VC	XC	XC		C	C	M	M	M	C	M	M		M	C	VC	M
	50	43	C	VC	XC	XC		C	C	M	M	M	C	M	M		F	C	VC	M
	60	52	C	C	XC	XC		C	C	F	M	F	C	M	M		F	C	C	M
	70	61	C	C	VC	XC		C	C	F	M		M						C	
0.8 GPM #8	20	16	C					VC	VC	C	C		VC	C	C				VC	
	30	24	C	XC	XC		VC	VC	VC	C	C		VC	C	C		M	C	VC	C
	40	32	C	XC	XC	XC	UC	C	C	M	C	M	VC	M	C		M	C	VC	C
	50	39	C	VC	XC	XC	UC	C	C	M	M	M	C	M	M		M	C	C	M
	60	47	C	VC	XC	XC	UC	C	C	M	M	M	C	M	M		M	C	C	M
	70	55	C	VC	XC	XC	XC	C	C	M	M		C						C	
1.0 GPM #10	20	14	VC																	
	30	21	VC				UC			C	VC		XC	C	C		M		UC	
	40	28	C	XC	XC	UC	UC			C	C	M	XC	C	C		M		XC	
	50	35	C	XC	XC	UC	UC			M	M	M	VC	C	C		M		XC	
	60	42	C	VC	XC	UC	UC			M	M	M	VC	M	M		M		VC	
	70	49	C	VC	XC	XC	UC			M	M		VC						VC	
1.2 GPM #12	20	12																		
	30	18																	UC	
	40	24																	UC	
	50	30																	XC	
	60	36																	VC	
	70	42																	VC	
1.25 GPM #12.5	20	12	XC																	
	30	18	XC																	
	40	24	VC	XC	UC															
	50	30	VC	XC	UC	UC														
	60	36	VC	XC	XC	UC														
	70	42	C	VC	XC	XC														
1.5 GPM #15	20	10	XC																	
	30	15	XC				UC			VC	VC				VC					
	40	21	XC				UC			VC	VC				VC					
	50	26	VC	XC	UC		UC			VC	VC	C			VC					
	60	31	VC	XC	XC	UC	UC			VC	VC	C			VC					
	70	36	VC	XC	XC	UC	UC			C	C									

6.8 - Nozzle Speed Range (KPH) - 38 cm Nozzle Spacing

Speed Range (KPH) - 38 cm Nozzle Spacing

Tip Size	Gauge (kPa)	30 l/ha				50 l/ha				60 l/ha				70 l/ha				80 l/ha				100 l/ha				120 l/ha			
		Min	-		Max	Min	-		Max	Min	-		Max	Min	-		Max	Min	-		Max	Min	-		Max	Min	-		Max
		25%	50%	75%	100%	25%	50%	75%	100%	25%	50%	75%	100%	25%	50%	75%	100%	25%	50%	75%	100%	25%	50%	75%	100%	25%	50%	75%	100%
0.1 GPM #1	138	4	7	11	14	2	4	6	8	2	4	5	7	2	3	5	6	1	3	4	5	1	2	3	4	1	2	3	4
	207	4	9	13	17	3	5	8	10	2	4	6	9	2	4	6	7	2	3	5	6	1	3	4	5	1	2	3	4
	276	5	10	15	20	3	6	9	12	2	5	7	10	2	4	6	9	2	4	6	7	1	3	4	6	1	2	4	5
	345	6	11	17	22	3	7	10	13	3	6	8	11	2	5	7	10	2	4	6	8	2	3	5	7	1	3	4	6
	414	6	12	18	24	4	7	11	15	3	6	9	12	3	5	8	10	2	5	7	9	2	4	5	7	2	3	5	6
	483	7	13	20	26	4	8	12	16	3	7	10	13	3	6	8	11	2	5	7	10	2	4	6	8	2	3	5	7
0.15 GPM #1.5	138	5	11	16	21	3	6	9	13	3	5	8	11	2	5	7	9	2	4	6	8	2	3	5	6	1	3	4	5
	207	6	13	19	26	4	8	12	15	3	6	10	13	3	6	8	11	2	5	7	10	2	4	6	8	2	3	5	6
	276	7	15	22	30	4	9	13	18	4	7	11	15	3	6	10	13	3	6	8	11	2	4	7	9	2	4	6	7
	345	8	17	25	33	5	10	15	20	4	8	12	17	4	7	11	14	3	6	9	12	2	5	7	10	2	4	6	8
	414	9	18	27	36	5	11	16	22	5	9	14	18	4	8	12	16	3	7	10	14	3	5	8	11	2	5	7	9
	483	10	20	30	39	6	12	18	24	5	10	15	20	4	8	13	17	4	7	11	15	3	6	9	12	2	5	7	10
0.2 GPM #2	138	7	14	21	28	4	8	13	17	3	7	10	14	3	6	9	12	3	5	8	10	2	4	6	8	2	3	5	7
	207	9	17	26	34	5	10	15	21	4	9	13	17	4	7	11	15	3	6	10	13	3	5	8	10	2	4	6	9
	276	10	20	30	40	6	12	18	24	5	10	15	20	4	8	13	17	4	7	11	15	3	6	9	12	2	5	7	10
	345	11	22	33	44	7	13	20	27	6	11	17	22	5	9	14	19	4	8	12	17	3	7	10	13	3	6	8	11
	414	12	24	36	48	7	15	22	29	6	12	18	24	5	10	16	21	5	9	14	18	4	7	11	15	3	6	9	12
	483					8	16	24	31	7	13	20	26	6	11	17	22	5	10	15	20	4	8	12	16	3	7	10	13
0.25 GPM #2.5	138	9	17	26	35	5	10	16	21	4	9	13	17	4	7	11	15	3	7	10	13	3	5	8	10	2	4	7	9
	207	11	21	32	43	6	13	19	26	5	11	16	21	5	9	14	18	4	8	12	16	3	6	10	13	3	5	8	11
	276					7	15	22	30	6	12	18	25	5	11	16	21	5	9	14	18	4	7	11	15	3	6	9	12
	345					8	16	25	33	7	14	21	27	6	12	18	24	5	10	15	21	4	8	12	16	3	7	10	14
	414					9	18	27	36	8	15	23	30	6	13	19	26	6	11	17	23	5	9	14	18	4	8	11	15
	483					10	20	29	39	8	16	24	33	7	14	21	28	6	12	18	24	5	10	15	20	4	8	12	16
0.3 GPM #3	138	10	21	31	41	6	12	19	25	5	10	16	21	4	9	13	18	4	8	12	16	3	6	9	12	3	5	8	10
	207					8	15	23	30	6	13	19	25	5	11	16	22	5	10	14	19	4	8	11	15	3	6	10	13
	276					9	18	26	35	7	15	22	29	6	13	19	25	6	11	17	22	4	9	13	18	4	7	11	15
	345					10	20	30	39	8	16	25	33	7	14	21	28	6	12	18	25	5	10	15	20	4	8	12	16
	414					11	22	32	43	9	18	27	36	8	15	23	31	7	13	20	27	5	11	16	22	4	9	13	18
	483					12	23	35	47	10	19	29	39	8	17	25	33	7	15	22	29	6	12	17	23	5	10	15	19
0.4 GPM #4	138					8	16	25	33	7	14	20	27	6	12	18	23	5	10	15	20	4	8	12	16	3	7	10	14
	207					10	20	30	40	8	17	25	33	7	14	21	29	6	13	19	25	5	10	15	20	4	8	13	17
	276					12	23	35	46	10	19	29	39	8	17	25	33	7	14	22	29	6	12	17	23	5	10	14	19
	345									11	22	32	43	9	18	28	37	8	16	24	32	6	13	19	26	5	11	16	22
	414									12	24	35	47	10	20	30	41	9	18	27	35	7	14	21	28	6	12	18	24
	483													11	22	33	44	10	19	29	38	8	15	23	31	6	13	19	26
0.5 GPM #5	138					10	20	30	40	8	17	25	34	7	14	22	29	6	13	19	25	5	10	15	20	4	8	13	17
	207									10	21	31	41	9	18	26	35	8	15	23	31	6	12	18	25	5	10	15	21
	276									12	24	36	47	10	20	30	41	9	18	27	36	7	14	21	28	6	12	18	24
	345													11	23	34	45	10	20	30	40	8	16	24	32	7	13	20	26
	414																	11	22	33	44	9	17	26	35	7	15	22	29
	483																	12	24	35	47	9	19	28	38	8	16	24	31

Speed Range (KPH) - 38 cm Nozzle Spacing

Tip Size	Gauge (kPa)	30 l/ha				50 l/ha				60 l/ha				70 l/ha				80 l/ha				100 l/ha				120 l/ha			
		Min - Max				Min - Max				Min - Max				Min - Max				Min - Max				Min - Max				Min - Max			
		25%	50%	75%	100%	25%	50%	75%	100%	25%	50%	75%	100%	25%	50%	75%	100%	25%	50%	75%	100%	25%	50%	75%	100%	25%	50%	75%	100%
0.6 GPM #6	138									10	20	30	39	8	17	25	34	7	15	22	30	6	12	18	24	5	10	15	20
	207									12	24	36	48	10	21	31	41	9	18	27	36	7	14	22	29	6	12	18	24
	276													12	24	36	48	10	21	31	42	8	17	25	33	7	14	21	28
	345																	12	23	35	47	9	19	28	37	8	16	23	31
	414																					10	20	31	41	9	17	26	34
	483																					11	22	33	44	9	18	28	37
0.8 GPM #8	138													11	21	32	43	9	19	28	38	8	15	23	30	6	13	19	25
	207																	11	23	34	46	9	18	28	37	8	15	23	31
	276																					11	21	32	42	9	18	27	35
	345																					12	24	36	48	10	20	30	40
	414																									11	22	33	43
	483																									12	23	35	47
1.0 GPM #10	138																	11	22	33	44	9	18	27	36	7	15	22	30
	207																					11	22	33	43	9	18	27	36
	276																									10	21	31	42
	345																									12	23	35	47
	414																												
	483																												
1.2 GPM #12	138																					10	20	30	40	8	17	25	33
	207																									10	20	31	41
	276																									12	24	35	47
	345																												
	414																												
	483																												
1.25 GPM #12.5	138																												
	207																									10	21	31	42
	276																									12	24	36	48
	345																												
	414																												
	483																												
1.5 GPM #15	138																												
	207																									12	23	35	46
	276																												
	345																												
	414																												
	483																												

6.9 - Nozzle Speed Range (KPH) - 50 cm Nozzle Spacing

Speed Range (KPH) - 50 cm Nozzle Spacing

Tip Size	Gauge (kPa)	30 l/ha				50 l/ha				60 l/ha				70 l/ha				80 l/ha				100 l/ha				120 l/ha			
		Min	-		Max	Min	-		Max	Min	-		Max	Min	-		Max	Min	-		Max	Min	-		Max	Min	-		Max
		25%	50%	75%	100%	25%	50%	75%	100%	25%	50%	75%	100%	25%	50%	75%	100%	25%	50%	75%	100%	25%	50%	75%	100%	25%	50%	75%	100%
0.1 GPM #1	138	3	5	8	11	2	3	5	6	1	3	4	5	1	2	3	5	1	2	3	4	1	2	2	3	1	1	2	3
	207	3	7	10	13	2	4	6	8	2	3	5	7	1	3	4	6	1	2	4	5	1	2	3	4	1	2	2	3
	276	4	8	11	15	2	5	7	9	2	4	6	8	2	3	5	6	1	3	4	6	1	2	3	5	1	2	3	4
	345	4	8	13	17	3	5	8	10	2	4	6	8	2	4	5	7	2	3	5	6	1	3	4	5	1	2	3	4
	414	5	9	14	19	3	6	8	11	2	5	7	9	2	4	6	8	2	3	5	7	1	3	4	6	1	2	3	5
	483	5	10	15	20	3	6	9	12	2	5	7	10	2	4	6	9	2	4	6	7	1	3	4	6	1	2	4	5
0.15 GPM #1.5	138	4	8	12	16	2	5	7	10	2	4	6	8	2	3	5	7	1	3	4	6	1	2	4	5	1	2	3	4
	207	5	10	15	20	3	6	9	12	2	5	7	10	2	4	6	8	2	4	6	7	1	3	4	6	1	2	4	5
	276	6	11	17	23	3	7	10	14	3	6	8	11	2	5	7	10	2	4	6	8	2	3	5	7	1	3	4	6
	345	6	13	19	25	4	8	11	15	3	6	9	13	3	5	8	11	2	5	7	9	2	4	6	8	2	3	5	6
	414	7	14	21	28	4	8	12	17	3	7	10	14	3	6	9	12	3	5	8	10	2	4	6	8	2	3	5	7
	483	7	15	22	30	4	9	13	18	4	7	11	15	3	6	10	13	3	6	8	11	2	4	7	9	2	4	6	7
0.2 GPM #2	138	5	11	16	21	3	6	10	13	3	5	8	11	2	5	7	9	2	4	6	8	2	3	5	6	1	3	4	5
	207	7	13	20	26	4	8	12	16	3	7	10	13	3	6	8	11	2	5	7	10	2	4	6	8	2	3	5	7
	276	8	15	23	30	5	9	14	18	4	8	11	15	3	6	10	13	3	6	8	11	2	5	7	9	2	4	6	8
	345	8	17	25	34	5	10	15	20	4	8	13	17	4	7	11	14	3	6	9	13	3	5	8	10	2	4	6	8
	414	9	18	28	37	6	11	17	22	5	9	14	18	4	8	12	16	3	7	10	14	3	6	8	11	2	5	7	9
	483	10	20	30	40	6	12	18	24	5	10	15	20	4	9	13	17	4	7	11	15	3	6	9	12	2	5	7	10
0.25 GPM #2.5	138	7	13	20	26	4	8	12	16	3	7	10	13	3	6	8	11	2	5	7	10	2	4	6	8	2	3	5	7
	207	8	16	24	32	5	10	15	19	4	8	12	16	3	7	10	14	3	6	9	12	2	5	7	10	2	4	6	8
	276	9	19	28	37	6	11	17	22	5	9	14	19	4	8	12	16	4	7	11	14	3	6	8	11	2	5	7	9
	345	10	21	31	42	6	13	19	25	5	10	16	21	4	9	13	18	4	8	12	16	3	6	9	13	3	5	8	10
	414	11	23	34	46	7	14	21	27	6	11	17	23	5	10	15	20	4	9	13	17	3	7	10	14	3	6	9	11
	483					7	15	22	30	6	12	19	25	5	11	16	21	5	9	14	19	4	7	11	15	3	6	9	12
0.3 GPM #3	138	8	16	24	32	5	9	14	19	4	8	12	16	3	7	10	14	3	6	9	12	2	5	7	9	2	4	6	8
	207	10	19	29	39	6	12	17	23	5	10	14	19	4	8	12	17	4	7	11	14	3	6	9	12	2	5	7	10
	276	11	22	33	45	7	13	20	27	6	11	17	22	5	10	14	19	4	8	13	17	3	7	10	13	3	6	8	11
	345					7	15	22	30	6	12	19	25	5	11	16	21	5	9	14	19	4	7	11	15	3	6	9	12
	414					8	16	25	33	7	14	20	27	6	12	18	23	5	10	15	20	4	8	12	16	3	7	10	14
	483					9	18	27	35	7	15	22	29	6	13	19	25	6	11	17	22	4	9	13	18	4	7	11	15
0.4 GPM #4	138	10	21	31	41	6	12	19	25	5	10	16	21	4	9	13	18	4	8	12	16	3	6	9	12	3	5	8	10
	207					8	15	23	30	6	13	19	25	5	11	16	22	5	10	14	19	4	8	11	15	3	6	10	13
	276					9	18	26	35	7	15	22	29	6	13	19	25	5	11	16	22	4	9	13	18	4	7	11	15
	345					10	20	30	39	8	16	25	33	7	14	21	28	6	12	18	25	5	10	15	20	4	8	12	16
	414					11	22	32	43	9	18	27	36	8	15	23	31	7	13	20	27	5	11	16	22	4	9	13	18
	483					12	23	35	47	10	19	29	39	8	17	25	33	7	15	22	29	6	12	17	23	5	10	15	19
0.5 GPM #5	138					8	15	23	31	6	13	19	25	5	11	16	22	5	10	14	19	4	8	11	15	3	6	10	13
	207					9	19	28	37	8	16	23	31	7	13	20	27	6	12	18	23	5	9	14	19	4	8	12	16
	276					11	22	32	43	9	18	27	36	8	15	23	31	7	14	20	27	5	11	16	22	5	9	14	18
	345					12	24	36	48	10	20	30	40	9	17	26	35	8	15	23	30	6	12	18	24	5	10	15	20
	414									11	22	33	44	9	19	28	38	8	17	25	33	7	13	20	26	6	11	17	22
	483									12	24	36	48	10	20	31	41	9	18	27	36	7	14	21	29	6	12	18	24

Speed Range (KPH) - 50 cm Nozzle Spacing

Tip Size	Gauge (kPa)	30 l/ha				50 l/ha				60 l/ha				70 l/ha				80 l/ha				100 l/ha				120 l/ha			
		Min	-		Max	Min	-		Max	Min	-		Max	Min	-		Max	Min	-		Max	Min	-		Max	Min	-		Max
		25%	50%	75%	100%	25%	50%	75%	100%	25%	50%	75%	100%	25%	50%	75%	100%	25%	50%	75%	100%	25%	50%	75%	100%	25%	50%	75%	100%
0.6 GPM #6	138					9	18	27	36	7	15	22	30	6	13	19	26	6	11	17	22	4	9	13	18	4	7	11	15
	207					11	22	33	44	9	18	28	37	8	16	24	31	7	14	21	28	6	11	17	22	5	9	14	18
	276									11	21	32	42	9	18	27	36	8	16	24	32	6	13	19	25	5	11	16	21
	345									12	24	36	47	10	20	30	41	9	18	27	36	7	14	21	28	6	12	18	24
	414													11	22	33	44	10	19	29	39	8	16	23	31	6	13	19	26
	483													12	24	36	48	11	21	32	42	8	17	25	34	7	14	21	28
0.8 GPM #8	138					11	23	34	46	10	19	29	38	8	16	24	33	7	14	21	29	6	11	17	23	5	10	14	19
	207									12	23	35	47	10	20	30	40	9	17	26	35	7	14	21	28	6	12	17	23
	276													12	23	35	46	10	20	30	40	8	16	24	32	7	13	20	27
	345																	11	23	34	45	9	18	27	36	8	15	23	30
	414																					10	20	30	40	8	16	25	33
	483																					11	21	32	43	9	18	27	36
1.0 GPM #10	138									11	22	34	45	10	19	29	39	8	17	25	34	7	13	20	27	6	11	17	22
	207													12	24	35	47	10	21	31	41	8	17	25	33	7	14	21	28
	276																	12	24	36	48	10	19	29	38	8	16	24	32
	345																					11	21	32	43	9	18	27	36
	414																					12	23	35	47	10	19	29	39
	483																									11	21	32	42
1.2 GPM #12	138													11	22	33	44	10	19	29	38	8	15	23	30	6	13	19	25
	207																	12	23	35	47	9	19	28	37	8	16	23	31
	276																					11	22	32	43	9	18	27	36
	345																					12	24	36	48	10	20	30	40
	414																									11	22	33	44
	483																									12	24	36	48
1.25 GPM #12.5	138																												
	207																					10	19	29	38	8	16	24	32
	276																					11	22	33	44	9	18	28	37
	345																									10	21	31	41
	414																									11	23	34	45
	483																												
1.5 GPM #15	138																												
	207																					11	21	32	42	9	18	26	35
	276																									10	20	31	41
	345																									11	23	34	46
	414																												
	483																												

6.10 - Blended Pulse Droplet Classification Table - Metric

Droplet Classification Table ASABE S-572.1

Extremely Fine (EF)	Very Fine (VF)	Fine (F)	Medium (M)	Coarse (C)	Very Coarse (VC)	Extremely Coarse (EC)	Ultra Coarse (UC)
<50	50 - 136	137-177	178-218	219-349	350-428	429-622	>622

*** Blanks cells represent nozzles either not available or below the manufacturers operating specifications*

*** Hypro and TeeJet droplet classifications below may not match manufacturers spec sheets. The chart below adjusts the droplet classification to be representative of the Actual Nozzle Pressure*

Tip Size	Gauge (kPa)	Nozzle (kPa)	Wilger				Hypro						TeeJet							
			ER (110°)	SR (110°)	MR (110°)	DR (110°)	HF (140°)	GRD (120°)	LD (110°)	VP (110°)	TR (110°)	F (110°)	TTJ60 (110°)	XR (110°)	XRC (110°)	DG (110°)	TJ60 (110°)	DGTJ60 (110°)	TT (110°)	TP (110°)
0.1 GPM #1	138	137	F											F					C	
	207	206	F									F		F					M	F
	276	275	VF									F		F					M	F
	345	343	VF									F		F					M	F
	414	412	VF									VF		VF					F	VF
	483	481	VF																F	
0.15 GPM #1.5	138	137	F											F					C	
	207	205	F	M	C	VC						F		F		M		F	M	F
	276	273	F	M	C	C						F		F		F		F	M	F
	345	342	VF	M	C	C						F		F		F		F	M	F
	414	410	VF	M	C	C						F		F		F		F	F	F
	483	478	VF	F	M	C													F	
0.2 GPM #2	138	136	F					M	M	F	M		C	M	F				VC	
	207	203	F	C	C	XC		M	M	F	F	F	C	F	F	M	F	M	C	F
	276	271	F	M	C	VC		M	M	F	F	F	M	F	F	M	VF	M	M	F
	345	339	F	M	C	VC		M	M	F	F	F	M	F	F	M	VF	F	M	F
	414	407	F	M	C	C		M	M	F	F	F	M	F	F	M	VF	F	M	F
	483	475	VF	M	C	C		F	M	F	F		M						F	
0.25 GPM #2.5	138	134	M					M	M	M			VC	M	M				VC	
	207	202	M	C	VC	XC		M	M	F			C	M	F				C	
	276	269	M	C	C	VC		M	M	F			C	F	F				M	
	345	336	F	M	C	VC		M	M	F			M	F	F				M	
	414	403	F	M	C	VC		M	M	F			M	F	F				M	
	483	470	F	M	C	C		F	M	F			M						F	
0.3 GPM #3	138	133	M					M	C	M	M		VC	M	M				VC	
	207	199	M	C	VC	XC		M	C	F	M	F	C	M	F	C	F	M	C	F
	276	266	F	C	VC	XC		M	M	F	F	F	C	F	F	M	F	M	C	F
	345	332	F	C	C	VC		M	M	F	F	F	M	F	F	M	F	F	M	F
	414	399	F	C	C	VC		M	M	F	F	F	M	F	F	M	F	F	M	F
	483	465	F	C	C	VC		M	M	F	F		M						M	
0.4 GPM #4	138	129	C					C	C	M	M		VC	M	M				VC	
	207	194	C	C	VC	XC		C	C	M	M	M	C	M	M	C	F	C	C	M
	276	259	M	C	VC	XC		C	M	F	F	F	C	M	M	M	F	C	C	M
	345	323	M	C	VC	XC		M	M	F	F	F	M	F	F	M	F	C	M	F
	414	388	M	C	C	VC		M	M	F	F	F	M	F	F	M	F	M	M	F
	483	452	M	C	C	VC		M	M	F	F		M						M	
0.5 GPM #5	138	125	C					C	C	M	C		VC	M	M				VC	
	207	187	C	VC	XC	XC		C	C	M	M	M	C	M	M	C	M		VC	M
	276	250	M	C	XC	XC		C	C	F	F	F	C	M	M	C	M		C	M
	345	312	M	C	XC	XC		M	M	F	F	F	C	M	M	M	F		C	F
	414	375	M	C	VC	XC		M	M	F	F	F	C	F	F	M	F		C	F
	483	437	M	C	VC	XC		M	M	F	F		M						M	

Droplet Classification Table ASABE S-572.1

Extremely Fine (EF)	Very Fine (VF)	Fine (F)	Medium (M)	Coarse (C)	Very Coarse (VC)	Extremely Coarse (EC)	Ultra Coarse (UC)
<50	50 - 136	137-177	178-218	219-349	350-428	429-622	>622

*** Blanks cells represent nozzles either not available or below the manufacturers operating specifications*

*** Hypro and TeeJet droplet classifications below may not match manufacturers spec sheets. The chart below adjusts the droplet classification to be representative of the Actual Nozzle Pressure*

Tip Size	Gauge (kPa)	Nozzle (kPa)	Wilger				Hypro						TeeJet							
			ER (110°)	SR (110°)	MR (110°)	DR (110°)	HF (140°)	GRD (120°)	LD (110°)	VP (110°)	TR (110°)	F (110°)	TTJ60 (110°)	XR (110°)	XRC (110°)	DG (110°)	TJ60 (110°)	DGTJ60 (110°)	TT (110°)	TP (110°)
0.6 GPM #6	138	120	C					VC	VC	M	C		VC	M	C				VC	
	207	180	C	XC	XC			C	C	M	C	M	C	M	M		M	C	VC	M
	276	240	C	VC	XC	XC		C	C	M	M	M	C	M	M		M	C	VC	M
	345	300	C	VC	XC	XC		C	C	M	M	M	C	M	M		F	C	VC	M
	414	360	C	C	XC	XC		C	C	F	M	F	C	M	M		F	C	C	M
	483	420	C	C	VC	XC		C	C	F	M		M						C	
0.8 GPM #8	138	109	C					VC	VC	C	C		VC	C	C				VC	
	207	163	C	XC	XC		VC	VC	VC	C	C		VC	C	C		M	C	VC	C
	276	218	C	XC	XC	XC	UC	C	C	M	C	M	VC	M	C		M	C	VC	C
	345	272	C	VC	XC	XC	UC	C	C	M	M	M	C	M	M		M	C	C	M
	414	327	C	VC	XC	XC	UC	C	C	M	M	M	C	M	M		M	C	C	M
	483	381	C	VC	XC	XC	XC	C	C	M	M		C						C	
1.0 GPM #10	138	97	VC																	
	207	146	VC				UC			C	VC		XC	C	C		M		UC	
	276	195	C	XC	XC	UC	UC			C	C	M	XC	C	C		M		XC	
	345	243	C	XC	XC	UC	UC			M	M	M	VC	C	C		M		XC	
	414	292	C	VC	XC	UC	UC			M	M	M	VC	M	M		M		VC	
	483	341	C	VC	XC	XC	UC			M	M		VC						VC	
1.2 GPM #12	138	83																		
	207	124																	UC	
	276	135																	UC	
	345	207																	XC	
	414	248																	VC	
	483	290																	VC	
1.25 GPM #12.5	138	84	XC																	
	207	125	XC																	
	276	167	VC	XC	UC															
	345	209	VC	XC	UC	UC														
	414	251	VC	XC	XC	UC														
	483	292	C	VC	XC	XC														
1.5 GPM #15	138	71	XC																	
	207	107	XC				UC			VC	VC				VC					
	276	142	XC				UC			VC	VC				VC					
	345	178	VC	XC	UC		UC			VC	VC	C			VC					
	414	214	VC	XC	XC	UC	UC			VC	VC	C			VC					
	483	249	VC	XC	XC	UC	UC			C	C									

6.11 - Technical Bulletin - July 11, 2001 (Revised April 12, 2006)

Spray Skips from Poor Pulse Blending

Over the years, CapstanAG™ field engineers have received many questions about blended pulse spraying and its potential for causing skips in the field. In rare instances, skipping has been documented in the field. This technical bulletin is intended to explain pulse blending, and the techniques used to provide optimum spray coverage and to prevent skipping.

What is blended pulse spraying? Each nozzle in a blended pulse spray system emits 19 spray pulses per second. Adjacent nozzles have alternate timing. The alternating pulses, the overlapping spray patterns and the natural dispersing of droplets, blend together to provide consistent coverage of the target.

What makes the pulses blend? Below is an illustration of what a blended pulse spray pattern might look like if it were sprayed upon a flat surface. This spray pattern is similar to a #8 size flat fan spray tip (with a 110° fan angle) that is spraying 5 GPA at 15 MPH with a 50 PSI boom pressure. The nozzles are 20 in apart. Each tip is rotated 12.5° to prevent pattern interference between nozzles. The minimum boom height is 21 in above the spray target.

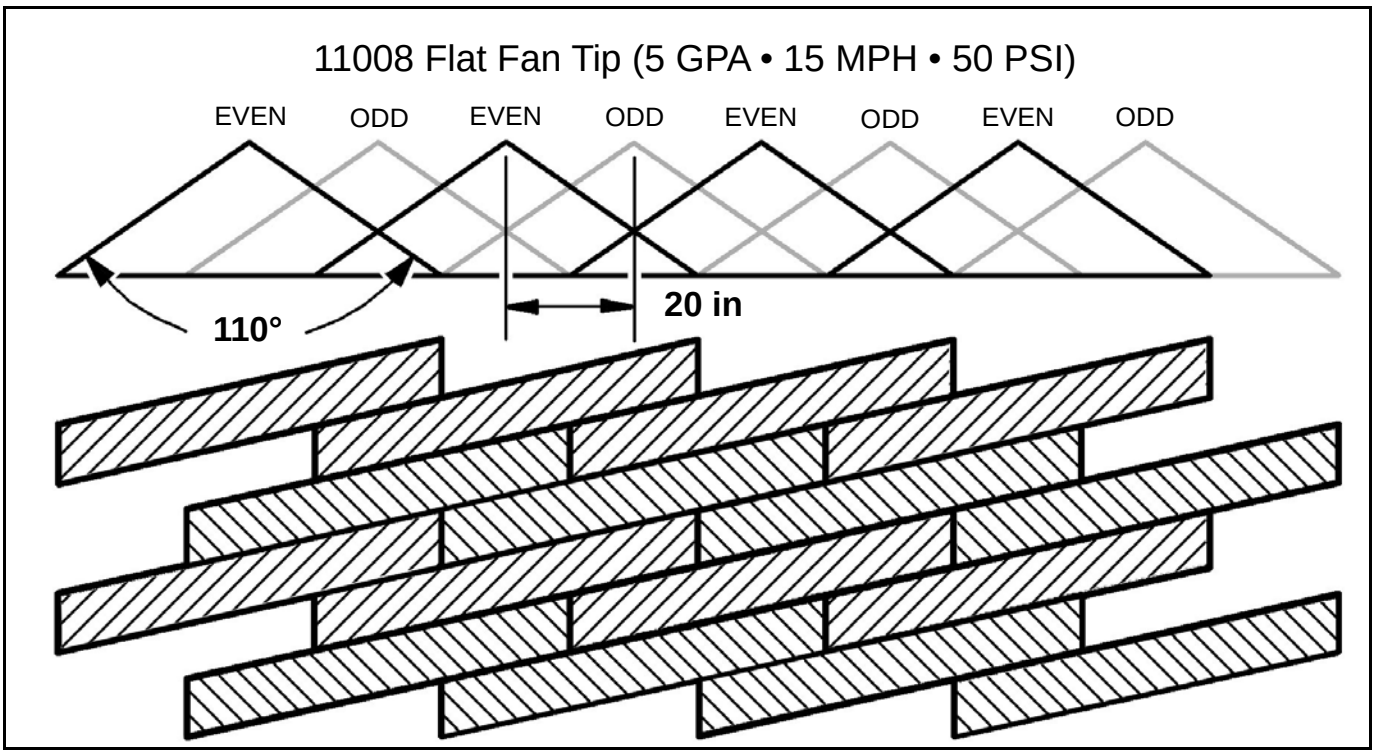

In this example, each nozzle sprays 1/3 of the time, but adjacent nozzles alternate and overlap to fill in areas between the nozzles. As the sprayer increases speed, rate, or boom height, the pulses become wider, this provides additional overlap, better pulse blending, and increased spray coverage.

As the sprayer decreases speed or rate, skips may begin to appear. For this example, a smaller tip size would be recommended if slower speeds are desired.

Pattern width and natural droplet dispersion are not shown in the diagram. These factors help to smooth out the pulses and fill in skips. The amount of droplet dispersion depends upon the style of tip being used. For example, low-drift tips typically emit large droplets and provide minimal droplet dispersion.

What causes skipping? Below is the same illustration from the previous page except that 80° fan angle tips are used rather than 110° tips. In this case, the 21 boom height doesn't provide adequate nozzle overlap and skips can be seen. Tips emitting small droplets, with plenty of droplet dispersion, will fill in large skips. Large droplet tips may not fill in the skips, and this may result in poor coverage. The skips appear as diagonal lines in the direction of travel. The angle of the diagonal depends upon the speed of the sprayer

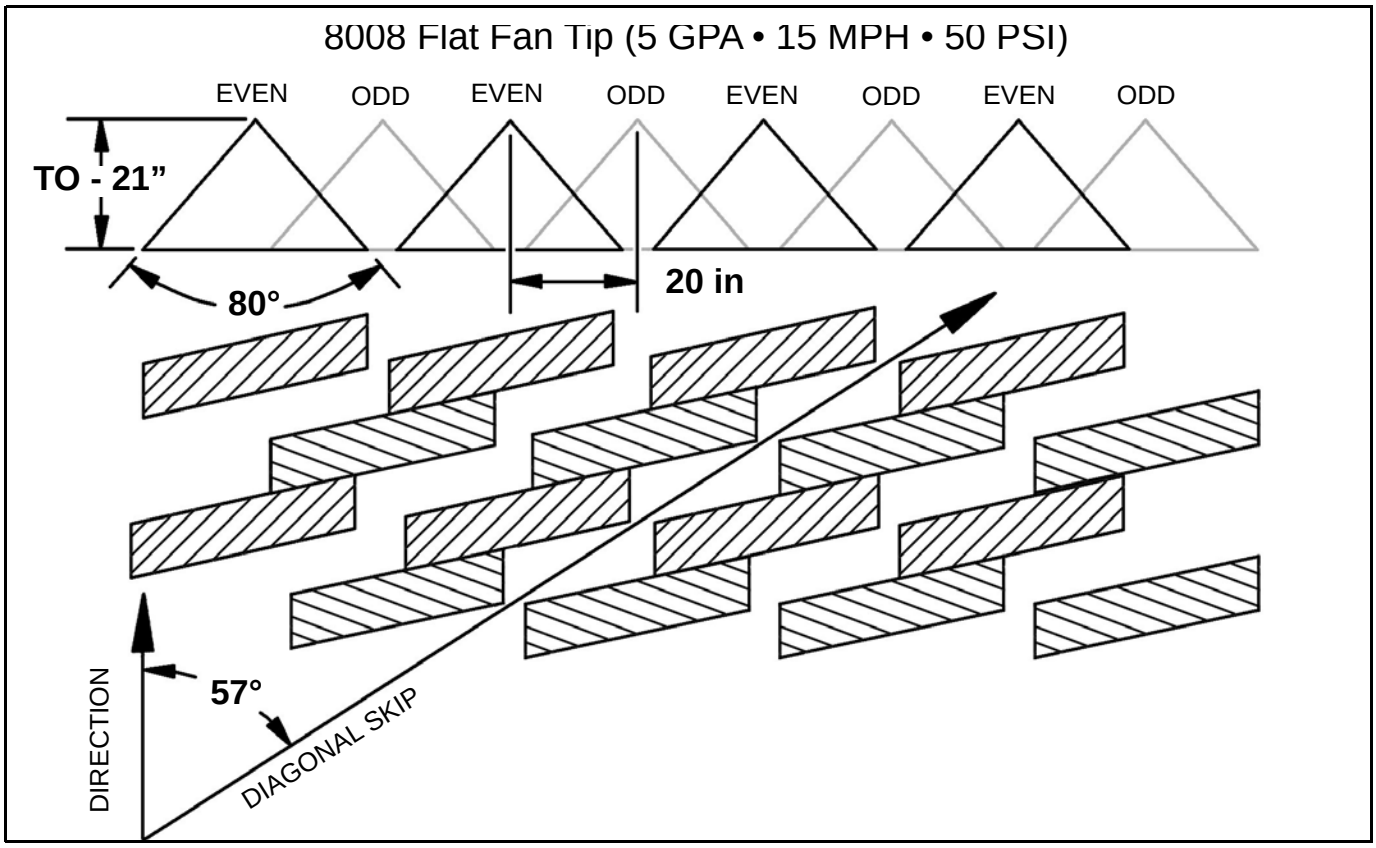

To Prevent Skipping:

1. Use wide-angle spray tips and appropriate boom heights to provide 150% nozzle overlap.
   - For 80 degree tips, use 36 in or greater boom height.
   - For 110 degree tips, use 24 in or greater boom height.
   - Use pressures which fully develop the intended fan angle.
2. Avoid pulse Duty Cycles below 33%.
   - Use appropriately sized spray tips for the desired speed, rate, and pressure ranges.
   - Avoid speeds in the lower 1/3 of the speed range.
   - Avoid rates in the lower 1/3 of the rate range.
3. Use additional caution when using drift control tips or drift control additives which increase droplet size and reduce droplet dispersion. Carefully observe the boom height, duty cycle, and tip selection recommendations to ensure adequate spray coverage.
4. **Always read and follow chemical label instructions.** Agronomic and environmental factors significantly affect efficiency of the chemicals, and will magnify the adverse effects of poor coverage. Carefully observe boom height, duty cycle and tip selection recommendations for hot and dry field conditions, large/mature weed pressures, etc.
5. Always apply blended pulse broadcast sprays using a 19 Hz or greater pulse frequency. The CapstanAG™ commander module and display let the pulse frequency to be reduced for non-sprayer applications, when uniform coverage is not required.

THIS PAGE IS INTENTIONALLY LEFT BLANK

7.0 - MAINTENANCE

7.1 - Servicing the Spray System

- Before servicing the spray system or spray components, the spray tank and system should be emptied of chemical mixture and flushed with clean water. Clean the machine of all chemical residue.

CHEMICAL RESIDUES MAY BE PRESENT IN THE OEM EQUIPMENT. RELEASE PRESSURE ON THE SPRAYER SYSTEM BEFORE SERVICING. RINSE THE SYSTEM WITH CLEAN WATER PRIOR TO INSTALLING OR SERVICING FITTINGS, HOSES, VALVES, OR NOZZLES. USE PROPER PPE AT ALL TIMES TO AVOID PERSONAL INJURY.

7.2 - Product Tank and Boom Line Rinsing

At the end of the day and/or between chemical changes the following rinse procedure must be performed.

- Drain any excess chemical from the tank according to standard safety practices of disposing of the chemical.
- Use a hose or a tank rinse system integrated on the machine to rinse the product tank thoroughly with clean water and drain according to standard safety practices.
- Fill the product tank with 50 gallons of clean water. Spray the water out the tank through the entire boom length making sure that the nozzles at each location spray.

NOTE: Failure to do a proper rinse at the end of the day can cause unnecessary plugging/dripping. Failure to rinse between chemical changes could leave residual chemical that could cause damage in the next application.

7.3 - Cleaning the Spray System

- Thoroughly clean the spray system with clean water after each use.
- Avoid high pressure spray when cleaning the spray system components, valves, and wiring connectors.

7.4 - Inspecting the Spray System

- Inspect the spray system hoses for cuts, nicks, or abrasions before each use. Immediately replace any damaged hoses.
- Check for loose hoses, mounting hardware, and components. Tighten if necessary.
- Make sure that all hoses and wiring are secure.
- Make sure that the boom strainers are clean.
- Check for damaged or missing decals. Replace decals if damaged or missing.

7.5 - Jump Starting/Welding/Charging

- If jump starting the machine, trip the 80 AMP circuit breaker to prevent damage to the system.
- If charging the machine batteries or welding on the machine, trip the 80 AMP circuit breaker or the machine's battery disconnect to prevent damage to the system.

7.6 - Strainers and Screens

NOTE: Factory-built sprayers typically come with 50-mesh strainers. Replace with 80-mesh strainers.

Check the mesh size of the strainers and replace the screens if they are too coarse.

[Figure 50] - Most sprayers are built with strainers to filter debris from the spray. An 80-mesh screen is required to prevent the nozzles from plugging. When selecting a strainer do not rely on the color coding. Check with the strainer manufacturer to be sure and select the 80-mesh strainer.

Plugged strainers will cause a reduction in the system operating pressure.

NOTE: When replacing the mesh screen on TeeJet strainers, first install and set the mesh screen in the strainer head. Then install the strainer cap. Failure to do this will likely result in a damaged mesh screen and overall strainer failure.

Clean the strainers on a regular basis.

Figure 50

NOTE: Use 80-mesh or finer strainer screens. The filter manufacturer is specified only on the strainer housing. Only a color code identifies the strainer mesh size which is not consistent between filter suppliers.

NOTE: The following chart has been typical, but check with your local supplier for any changes or updates.

MESH	TEEJET	HYPRO	ARAG	BANJO
30	Yellow	Red	Red	Yellow
50	Red	Blue	Blue	Red
80	Blue	Yellow	Yellow	Blue
100	Green	Green	Green	Green

7.7 - Nozzle Valve Blockage

Plugged nozzle valves can be classified into two categories:

- Plunger blockage
- Plunger stuck

[Figure 51] - Plunger blockage results when larger debris catches between the orifice (1) and plunger seal (2). This is the smallest flow passage within the nozzle valve.

Stuck plungers result when smaller debris collects around the plunger barrel (3) and binds the plunger in place.

Symptoms of a blocked or stuck plunger are:

- No spray
- Constant spray
- Dripping when the nozzle is shut off

NOTE: Pinched or split O-rings will also cause the nozzles to drip when shutoff.

NOTE: Operating a plugged nozzle valve for extended periods of time may result in a nozzle valve coil failure. Immediately clean any plugged nozzle valves.

NOTE: If plugged nozzles are a frequent problem in a particular boom section, inspect the machine's boom filter screens for plugged or damaged screens. An 80-mesh screen is recommended to prevent nozzles from plugging. Check the mesh size of the strainers and replace strainers if they are too coarse.

NOTE: Before removal or installation of the nozzle valves, make sure that the pressure has been released from the boom tubes.

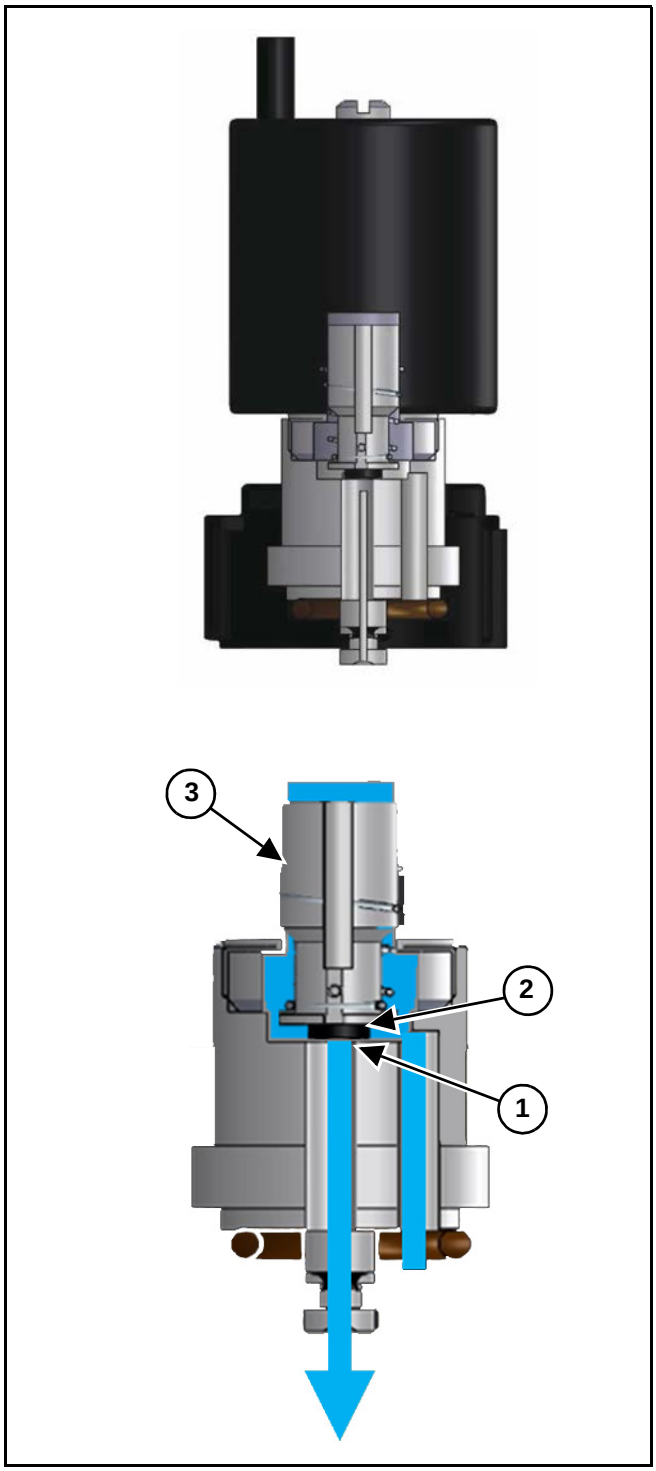

Figure 51

7.8 - Nozzle Valve Cleaning

WARNING

CHEMICAL RESIDUES MAY BE PRESENT IN THE EQUIPMENT. RELEASE PRESSURE ON THE BOOMS BEFORE SERVICING. RINSE THE SYSTEM WITH CLEAN WATER PRIOR TO INSTALLING OR SERVICING FITTINGS, HOSES, VALVES, OR NOZZLE VALVES. USE PROPER PPE AT ALL TIMES TO AVOID PERSONAL INJURY.

[Figure 52] - Remove the nozzle valve assembly from the nozzle body by unscrewing the fly nut.

[Figure 53] - Rotate the coil (1) counter-clockwise to remove from the valve body (5). Remove the plunger (2) from the coil. Inspect the O-ring (3) on the coil and inspect the O-rings (6) and (7) on the valve body.

NOTE: Remove debris from the nozzle valve components by washing with clean water.

[Figure 54] - Inspect the plunger for wear or damage. Replace the plunger if it is worn or damaged.

Inspect the valve body. Make sure that the orifice is not plugged with debris, worn or damaged. If orifice is worn or damaged replace valve body.

NOTE: Apply 40 in-lbs of torque to the coil when it threads into valve body to properly seat the O-ring.

[Figure 53] - Remove the tip-cap (8), pre-orifice (9), and strainer (10).

NOTE: Remove debris from the nozzle body components by washing with clean water. Replace any worn or damaged parts.

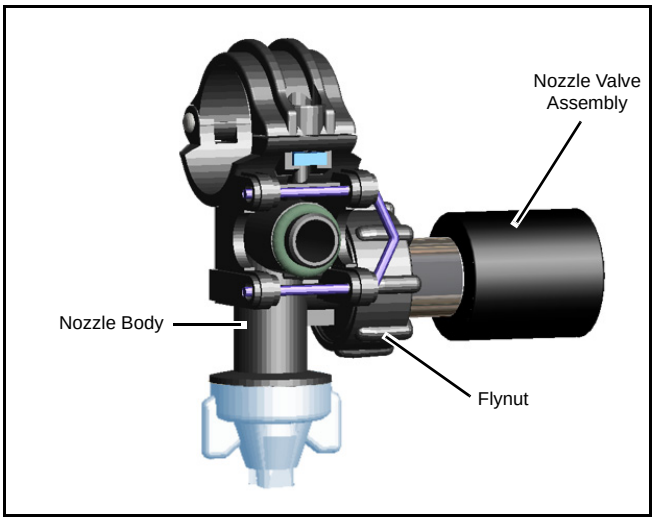

Figure 52

ITEM	DESCRIPTION
1	Coil
2	Plunger
3	O-ring, Viton - 015
4	Flynut
5	Valve Body
6	O-ring, Viton - 008
7	O-ring, Viton - 016
8	Tip-cap
9	Pre-Orifice, see Wilger.net
10	Strainer, see Wilger.net

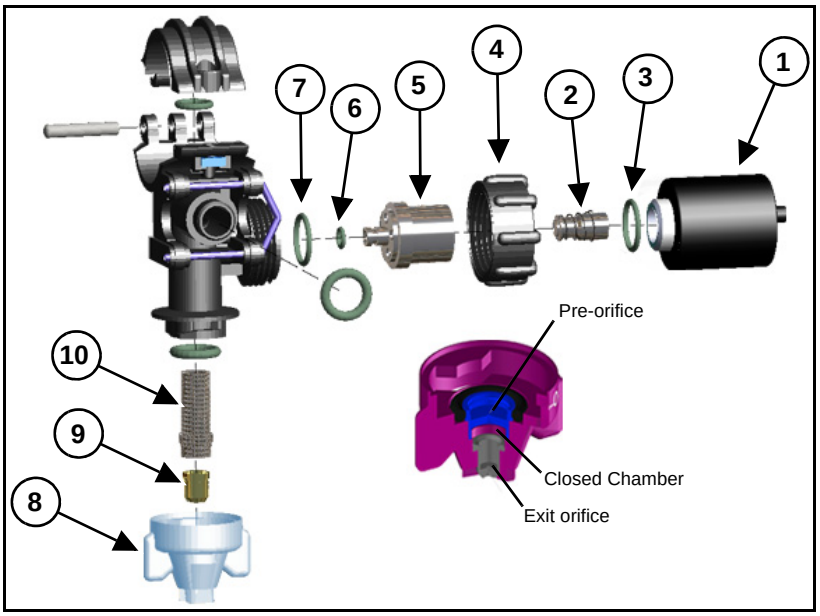

Figure 53

7.9 - Plunger Seal Inspection

[Figure 54] - After extended use, the soft plunger seal will wear a groove where the seal impacts the hard orifice seat. Replace the plunger if worn or damaged.

As the groove deepens, the pressure capacity of the valve will decrease until the pressure capacity interferes with the operating pressure of the sprayer. The result is erratic pulsing, often described as flickering.

The SharpShooter® system will operate normally at lower pressures until the replacement parts can be installed. High operating pressures and abrasive chemicals will accelerate the wear of the plunger seal material.

Figure 54

7.10 - Plunger Assembly Identification

[Figure 55] - Standard PFE Seal and Heavy Spring PFE Seal.

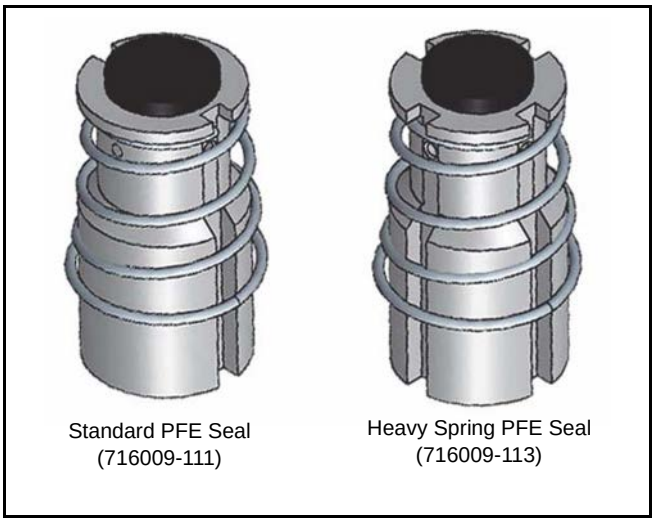

Figure 55

7.11 - Winterizing for Storage

DO NOT USE FERTILIZER TO WINTERIZE! The use of fertilizer for winterization will cause internal damage to the nozzle valves.

- Thoroughly clean the spray system before winter storage.
- Flush the spray system with clean water.
- Winterize the spray system with RV antifreeze for winter storage. Proper winterizing of the sprayer with a CapstanAG™ system installed on it is essential. Make sure that the booms are completely full of antifreeze at 100% strength and that the solenoids are pulsed (sprayed) for a few minutes to make sure that the antifreeze remaining in the solenoids is at full strength.

NOTE: An improper winterizing procedure could result in damage to the internal components of the solenoids.

8.0 - TROUBLESHOOTING

8.1 - Recommended Guidelines

NOTE: While necessary maintenance or repairs on the CapstanAG™ product can be performed by any company, we recommend only authorized CapstanAG™ dealers, as improper or incorrect maintenance or repairs voids this warranty.

When servicing a SharpShooter® with Rate Sync® system, CapstanAG™ recommends the following three step troubleshooting process:

1. Perform baseline service checks and verify the original SharpShooter® with Rate Sync® system setup values in this manual.
2. Identify individual performance problems. Evaluate possible causes and corrections for performance issues.
3. Troubleshoot individual components and replace if needed.

NOTE: The primary service tool will be a simple multi-meter that can measure voltage and resistance (ohms).

8.2 - Baseline Evaluation Protocol

1. Verify voltage readings. See pages 67 thru 76 for individual component testing.
2. Visually check all wire connections, harnesses, and connectors for loose, broken, or damaged wires.
3. Visually check all hoses for wear or damage.
4. Make sure that the correct nozzle size is being used for the application rate and mode of action.
5. Make sure that the filter housing is installed correctly with the proper direction of flow through the strainer.
6. Verify the strainer has the correct screen mesh.

NOTE: The correct strainer screen mesh - (80-mesh screen is standard and a 100-mesh screen for extreme cases).

7. Make sure that the strainer(s) are clean, and not damaged.
8. Repair or replace any damaged components.
9. Follow instructions that start on pages 19 to verity the SharpShooter® setup parameters.
10. Power up the rate controller. Verify the setup parameters.
11. Perform dry and wet tests, see SYSTEM TESTING on page 23.
12. Do a like component swap to see if the failure follows the component.

8.3 - Over and Under Application Troubleshooting Chart

WARNING

Before operating or servicing system: Read and understand the machine's Operator Manual and the SharpShooter® with Rate Sync® Operator and Maintenance Manual. Follow the warnings and instructions in the manuals when making repairs, adjustments, or servicing. Check for correct function after adjustments, repairs or service. Untrained operators and failure to follow instructions can cause injury or death.

Use this chart to locate and correct the problems which most often occur with the SharpShooter® with Rate Sync® system.

PROBLEM	CAUSE	CORRECTION
Under application.	Tips too small.	Check for proper tip size.
	Plugged tips.	Clean or replace tips.
	Plugged filter(s).	Clean or replace filter(s).
	Filter(s) not installed correctly.	Check all filters for correct installation.
	Plugged, kinked or collapsed hoses.	Check all hoses and replace as needed.
	Pump not turned on.	Turn pump on.
	Outrunning sprayer liquid system capability.	Slow down.
		Run at optimum pressure (not too low, not too high).
	Incorrect rate settings.	Check and adjust rate settings.
	Incorrect calibration settings.	Check and adjust settings.
	Faulty radar.	Replace radar.
	Poor GPS satellite signal.	Verify that the GPS is working correctly.
	Faulty rate controller switch.	Locate bad switch(s) and replace switch.
	Servo valve not working correctly.	Check servo valve and replace if needed.

PROBLEM	CAUSE	CORRECTION
Over application.	Tips too large.	Check for proper tip size.
	Worn tips.	Replace tips.
	Speed too slow.	Increase speed.
	Incorrect rate settings.	Check and adjust rate settings.
	Incorrect calibration settings.	Check and adjust settings.
	Servo valve not working correctly.	Check servo valve, and replace if needed.
Rate instability.	Low voltage to rate controller.	Test voltage and repair as needed.
	Faulty flow meter.	Repair or replace flow meter if needed.
	Faulty pressure dampener on diaphragm pump(s).	Replace pressure dampener(s).
	Faulty speed sensor reading.	Check radar and replace if needed.
	Collapsed suction hose.	Replace suction hose.
	Inlet plugged.	Check and clean inlet if needed.
	Incorrect valve calibration settings.	Check and adjust settings. See the rate controller's manual.
	Incorrect display PID parameters.	Check display PID Parameters andadjust as needed.
	Display Run/Hold Parameter too short.	Adjust display Run/Hold Parameter.
	Faulty rate controller.	Replace rate controller.
Pressure instability.	Faulty rate controller.	Replace rate controller.
	Worn or sticky poppets.	Check and replace poppets as needed.
	Incorrect display PID parameters.	Check display PID parameters and adjust as needed.
	Faulty pressure sensor.	Replace pressure sensor.
Single nozzle valve drips when shutoff.	Plunger is lodged with debris.	Clean nozzle valve. See Nozzle Valve Cleaning on page 60.
	Plunger is worn.	Replace plunger. See Plunger Seal Inspection on page 61.
Single nozzle valve sprays erratically.	Plunger is worn.	Replace plunger. See Plunger Seal Inspection on page 61.
Single nozzle valve will not shut off.	Plunger is lodged with debris.	Clean nozzle valve. See Nozzle Valve Cleaning on page 60.
Section will not spray.	Blown fuse on valve driver.	Replace fuse on valve driver.
	Faulty valve driver.	Replace valve driver.

PROBLEM	CAUSE	CORRECTION
Display not functioning properly.	Low voltage at display.	Perform system voltage checks.
Every other nozzle pulses.	Faulty valve driver.	Replace valve driver.
	Faulty harness.	Replace harness.
No pulse - Auto Mode (Manual Mode: Pulses).	Incorrect pressure sensor input and output settings.	Check and adjust settings.
No pulse - Auto Mode (Manual Mode: No pulse).	Faulty display.	Replace the display.

8.4 - Swapping Components

SharpShooter® with Rate Sync® systems are comprised of a number of components. Some of these components are used in multiples. Components with multiple usage are:

- Nozzle Valves
- Valve Drivers

When troubleshooting failed components, it can be helpful to swap the failed part with a working part at another location. If the problem follows the failed part to the new location, repair or replace the failed part.

If the problem does not follow the failed part, then the problem is likely elsewhere in the system and other troubleshooting means may be followed.

NOTE: Use caution when swapping failed components as in rare cases the failed component may cause other components to fail at the new location.

8.5 - Fuses

Fuses are located in three places within the SharpShooter® with Rate Sync® system.

Blown fuses are indicators of a short or overload condition. Therefore, never replace a fuse with a larger fuse. Larger fuses may result in costly component failures.

FUSE LOCATION	RATING	TYPE	COLOR
Display Extension Harness	5A	ATO/ATC	Tan
Valve Drivers	15A	ATO/ATC	Red

8.6 - Circuit Breaker

[Figure 56] - A circuit breaker is located near the battery or in the battery box. The 80A circuit breaker is equipped with automatic and manual trip button (1) as well as a manual reset lever (2).

CIRCUIT BREAKER	RATING	TYPE
Battery	80 AMP	Auto or Manual Trip, or Manual Reset

A tripped circuit breaker is an indicator of a short or overload condition.

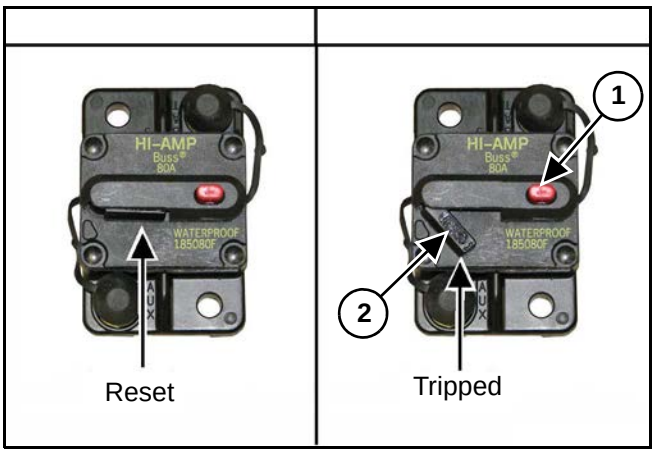

Figure 56

8.7 - Coil Test

Coil failures are often the result of:

- Extended valve use with a plugged nozzle
- Extended use in liquid fertilizer overspray environments

NOTE: CapstanAG™ recommends cleaning any plugged nozzle valves immediately and rinsing the inside of the boom with clean water and washing the outside of the coils with clean water as often as practical.

[Figure 57] - Use a voltmeter to measure 21 to 23.5 ohms of resistance across pins A and B on the nozzle valve connector.

If proper resistance is not found:

- Clean the connector terminals
- Replace the coil

Figure 57

8.8 - Power Hub Pinout Identification

Boom 1 to 6

1 - 12V-Battery (Red)
2 - GND Battery (Black)
3 - Boom Section Signal)
4 -Odd Pulse (Yellow)
5 - Even Pulse (Green)
6 - Run/Hold (Brown)

PSI

1 - Signal 0.5 - 5.0V (White)
2 - Power 12V (Red)
3 - Ground (Black)
4 - Not used

Boom Shutoffs (12V ON, 0V Off)

1 - Boom Section 1
2 - Boom Section 2
3 - Boom Section 3
4 - Boom Section 4
5 - Boom Section 5
6 - Boom Section 6
7 - Boom Section 7
8 - Boom Section 8
9 - Boom Section 9
10 - Boom Section 10
11 - Boom Section 11
12 - Boom Section 12

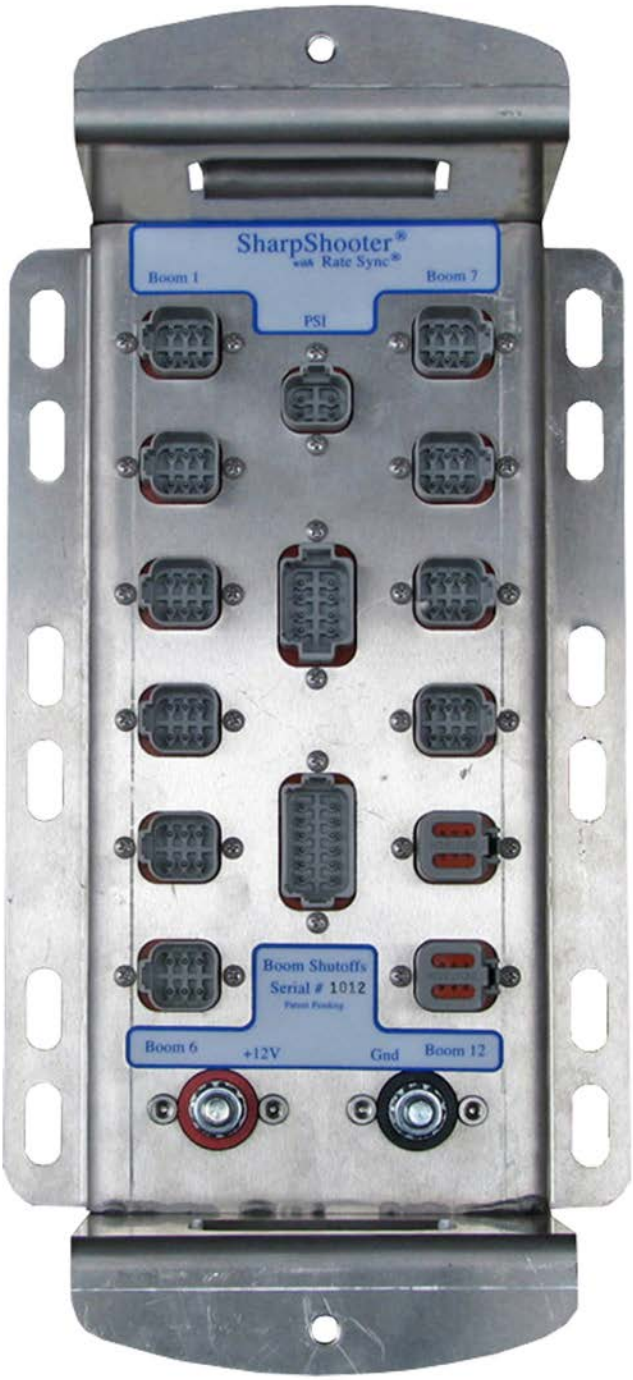

Boom 7 to 12

1 - 12V-Battery (Red)
2 - GND Battery (Black)
3 - Boom Section Signal)
4 -Odd Pulse (Yellow)
5 - Even Pulse (Green)
6 - Run/Hold (Brown)

Display

1 - Power 12V (Red)
2 - Ground (Black)
3 - Pressure Sensor (Blue)
4 - Odd Pulse (Yellow)
5 - Even Pulse (Green)
6 - Run/Hold (Brown)
7 - Switched Power (Red/White Stripe
8 - Not Used

8.9 - System Load Capacity Check

Disconnect the nozzle valve 2-pin connector that is located on the spray boom farthest from the battery. Turn off the display, and then turn on all boom sections. Start the engine and turn on all electrical loads including air conditioning, foam markers, monitors, etc.

[Figure 58] - Use a voltmeter to observe the system voltage between pins A and B.

The SharpShooter® with Rate Sync® nozzle valves operate best at 12 VDC or higher. Using less than 12 VDC will result in reduced pressure capacity. This will often result in erratic nozzle pulsing, sometimes described as “flickering”. Also, check nozzle valves for worn plunger seals. See Plunger Seal Inspection on page 61.

If low voltage is observed:

- Check and clean the battery terminals
- Check the battery condition
- Check the alternator condition
- Check the condition of connections

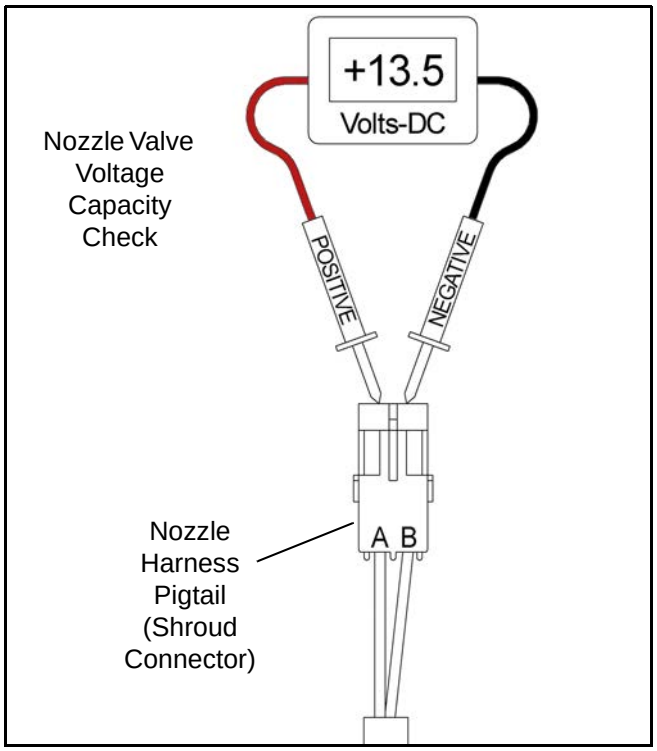

Figure 58

8.10 - Valve Driver Voltage Check

Disconnect the valve driver from the power hub harness by disconnecting the 6-pin Deutsch connector. The connector is generally located at each boom section.

[Figure 59] - Use a voltmeter to observe that there is 13.5 VDC between pins 1 and 2 with the engine running or 12.0 VDC without the engine running.

Be sure the polarity is accurate by observing the positive voltage when the red (positive) probe is connected to pin 1 and the black (negative) probe is connected to pin 2.

If no voltage is present:

- Check the 80 A breaker located at the sprayer battery compartment.
- Check the power hub battery connections.
- Check the power hub valve driver extension connection.
- Check the condition of the battery.

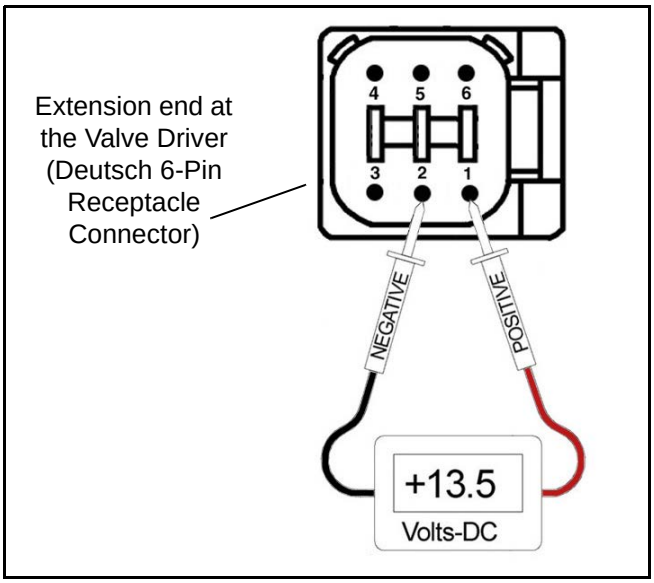

Figure 59

8.11 - Pressure Sensor Signal Test

Disconnect the pressure sensor from the pressure sensor harness. Connect one end of the pressure sensor breakout harness diagnostic tool into the pressure sensor shroud connector. Connect the other end into the pressure sensor harness tower connector.

With the engine running and the pump turned on, use the rate controller to establish 40 PSI on the pressure gauge.

[Figure 60] - Use a voltmeter to observe that there is 2.30 VDC between the black and white wires on the pressure sensor breakout harness.

Using the rate controller, adjust the pressure. Increasing the pressure should result into a higher output signal on the voltmeter (up to 5.0 VDC at 250 PSI). Decreasing the pressure should result in a lower output signal (down to 0.5 at 0 PSI).

If accurate voltage is not present:

- Check for power to the pressure sensor
- Replace the pressure sensor
- Verify the accuracy of the pressure gauge

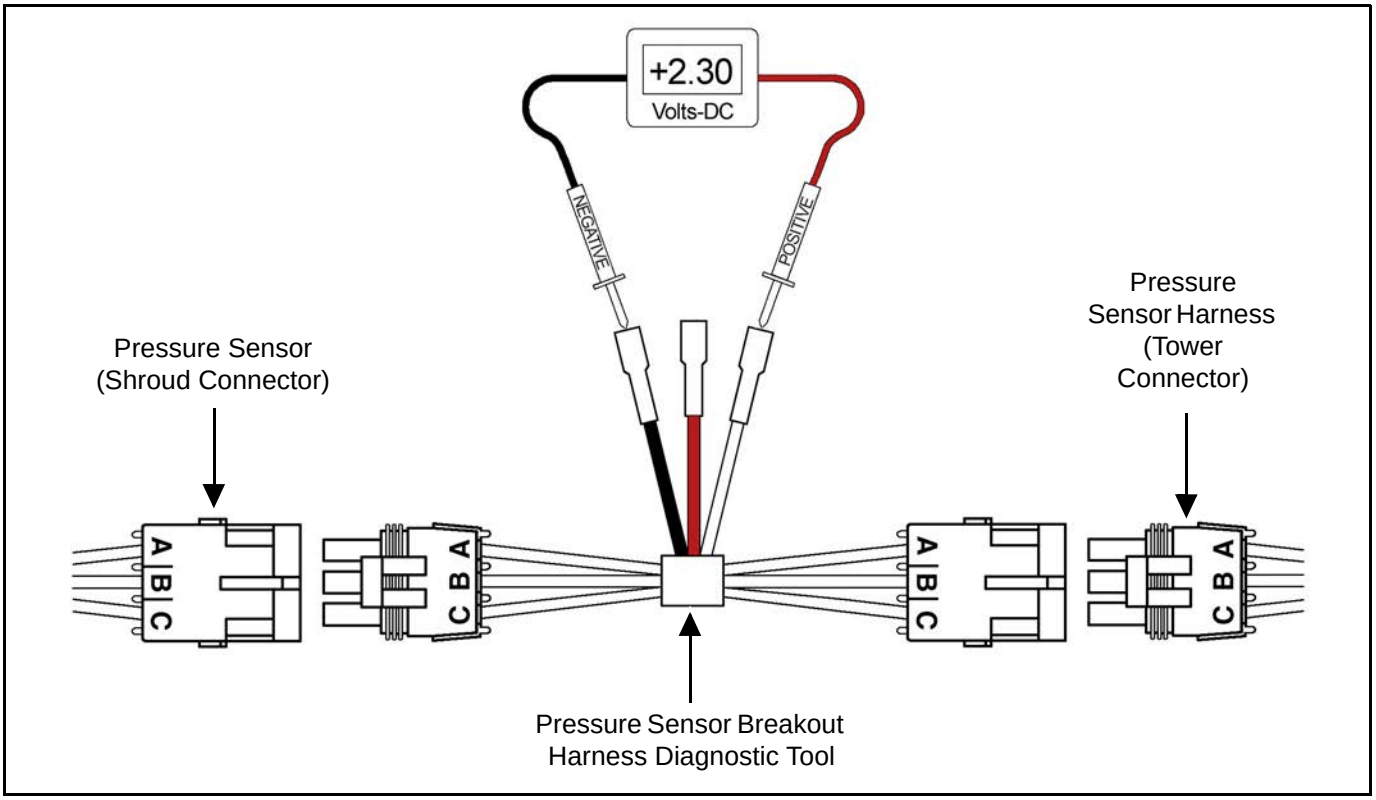

Figure 60

8.12 - Pressure Sensor Input Power Check

Disconnect the pressure sensor from the pressure sensor harness. Connect one end of the pressure sensor breakout harness diagnostic tool into the pressure sensor shroud connector. Connect the other end into the pressure sensor harness tower connector.

[Figure 61] - Use a voltmeter to observe that there is13.5 VDC between the red and black wire on the pressure sensor breakout harness with the engine running, or 12.0 VDC without the engine running.

Be sure the polarity is accurate by observing that there is positive voltage when the red (positive) probe is connected to the red pressure sensor breakout harness wire and the black (negative) probe is connected to the black pressure sensor breakout harness wire.

If no voltage is present:

- Check the fuse located at the battery
- Check the battery connections
- Check the condition of the battery
- Check the condition of the alternator

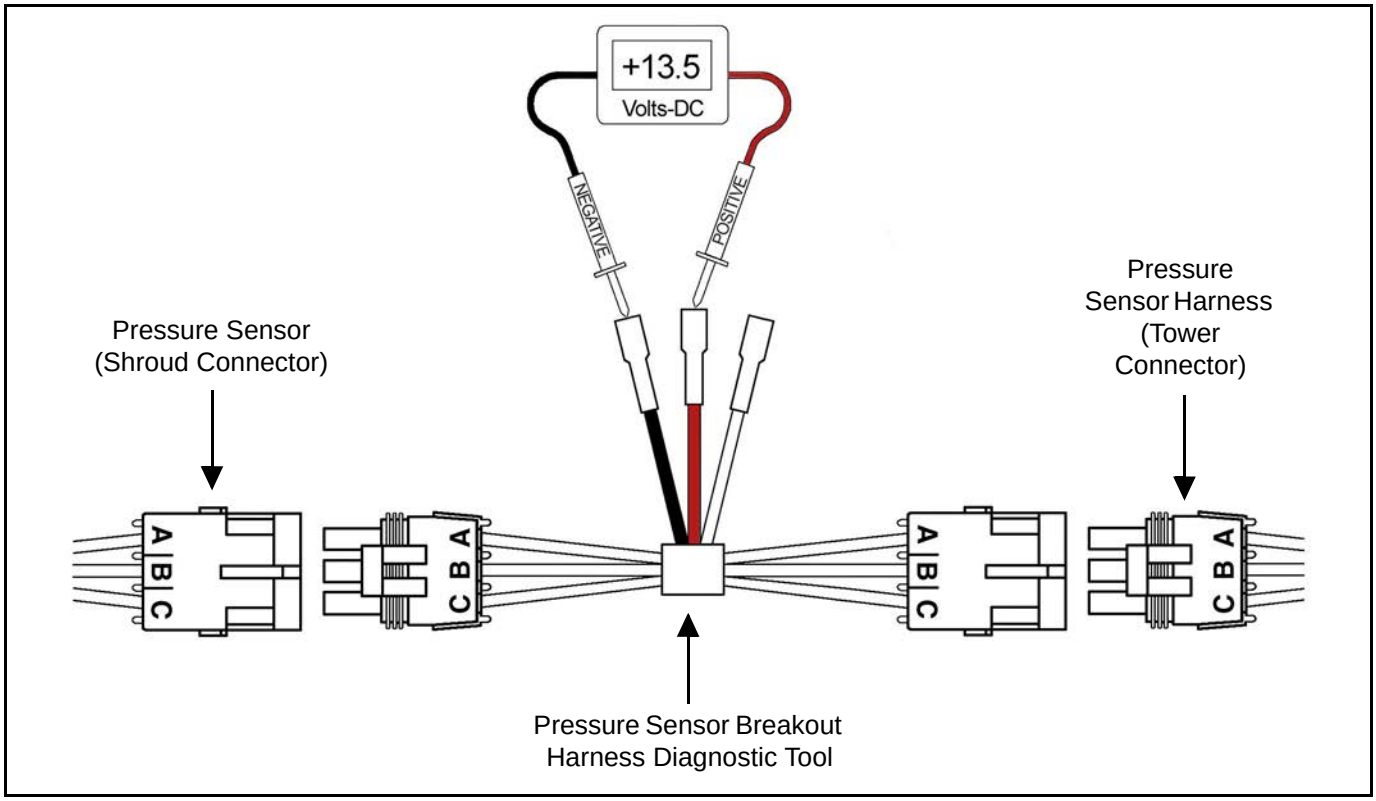

Figure 61

8.13 - Pulse Circuit Test

Display Output Check

Disconnect the valve driver from the extension harness by disconnecting the 6-pin Deutsch connector. Place the display in the **Manual Mode** and then select 70% duty cycle with the **INCREASE** or **DECREASE** button.

[Figure 62] - Use a voltmeter to observe that there is 10.00 VDC between pins 2 and 4.

Most voltmeters measure signal as 12 VDC 10 Hz square wave which is a low voltage. In addition, the signal is inverted, so the 70% duty cycle selected on display will actually be a 30% duty signal at the valve driver. Measurements may vary depending on the voltmeter used. This tests the even pulse.

Make the same measurement between pins 2 and 5. This tests the odd pulse.

If accurate voltage is not found:

- Check the valve driver extension connections
- Check the display extension connections
- Check the display serial diagnostics

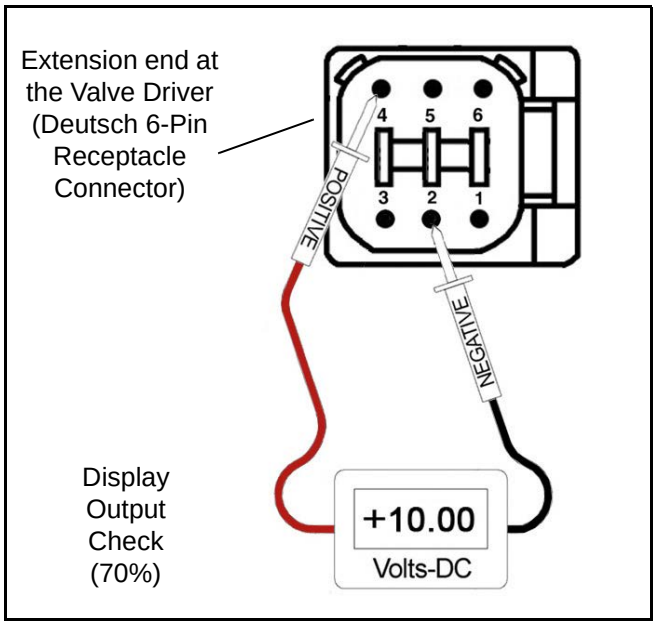

Figure 62

8.14 - Valve Driver Output Check

Disconnect the desired nozzle valve 2-pin connector from the nozzle harness connector located on the spray boom. Place the display in the **Manual Mode** and then select 70% duty cycle with the increase/decrease keys. Turn on the boom section, corresponding to the nozzle harness connector being tested.

[Figure 63] - Use a voltmeter to observe that there is 9.5 VDC between pins A and B.

Most voltmeters measure signal as 12 VDC 10 Hz square wave which is a low voltage. Measurements may vary depending on the voltmeter used. Note the color of the wire in position B as either White or Green.

Make the same measurement on an adjacent nozzle harness connector. The wire color in position B should change from white to green or from green to white.

If accurate voltage is not found:

- Check the nozzle harness extension connections
- Check the valve driver extension connections
- Check the display extension connections

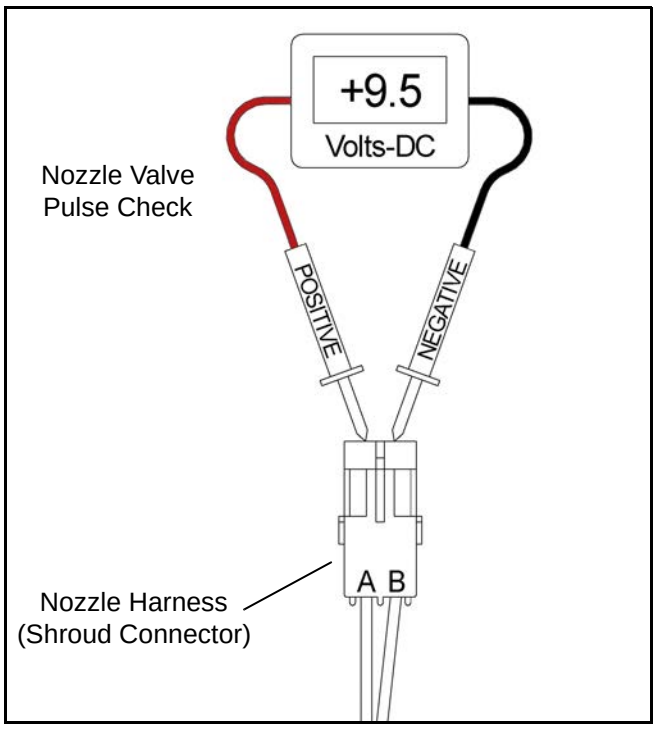

Figure 63

8.15 - Valve Driver Input Check

Disconnect the display from the pigtail harness by disconnecting the 8-pin Deutsch connector located on the display.

Start the engine, turn on the pump and boom, then use the spray rate controller to establish 40 PSI on the pressure gauge. The boom should now be spraying.

[Figure 64] - Tap a jumper wire, several times per second, between pins 1 and 4 on the power hub harness 8-pin Deutsch connector. Observe that every even nozzle valve turns off as the jumper connects and turns on as the jumper disconnects.

Tap a jumper wire, several times per second, between pins 1 and 5 on the extension harness connector. Observe that every odd nozzle valve turns on as the jumper connects and turns off as the jumper disconnects.

Observe the nozzle pulsing on each boom section.

If the boom sprays, but does not pulse, when the jumper wire is tapped:

- Check the power hub display extension connection.
- Check the valve driver extension connections.

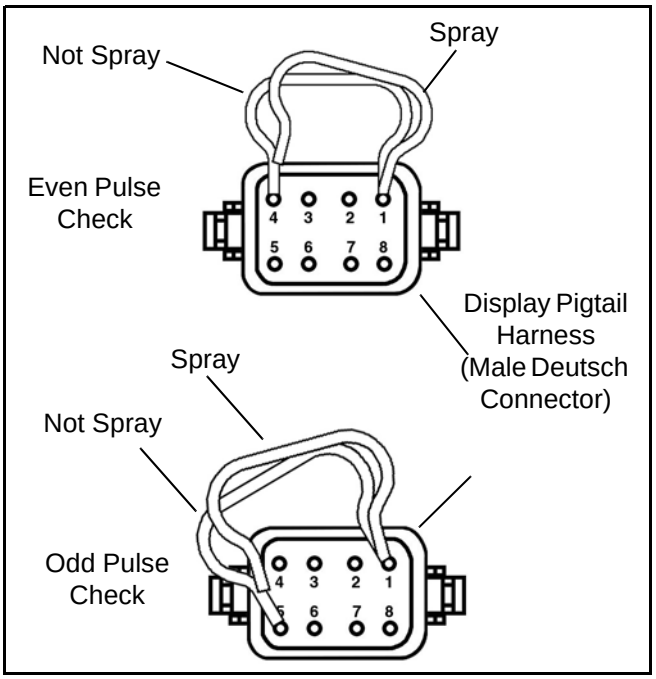

Figure 64

8.16 - Boom Section Run / Hold Signal Test

Disconnect the display from the pigtail harness by disconnecting the 8-pin Deutsch connector located on the display.

With water in the product, start the engine, turn on the pump with the boom off. Put the rate controller in the Manual Mode (now running speed and pressure). Set a test speed. Toggle the increase/decrease switch to establish 40 PSI on the pressure gauge. The boom should not be spraying.

The rate controller should be sending a 13.5 VDC (engine running) or a 12.0 VDC (engine off) run/hold signal through the shutoff adapter and power hub to the display.

[Figure 65] - Turn on boom section one to observe that the nozzle valves open and spray fully open. Use a voltmeter to check that signal between pins 2 and 6.

Turn off boom section number one and then observe the spray and voltage disappear. Repeat the test on remaining boom sections.

If no spray or voltage is observed:

1. Check the boom shutoff adapter connections
2. Check the run/hold signal from the rate controller harness
3. Check for continuity in the cable, and then check the rate controller section switches
4. Send in the rate controller

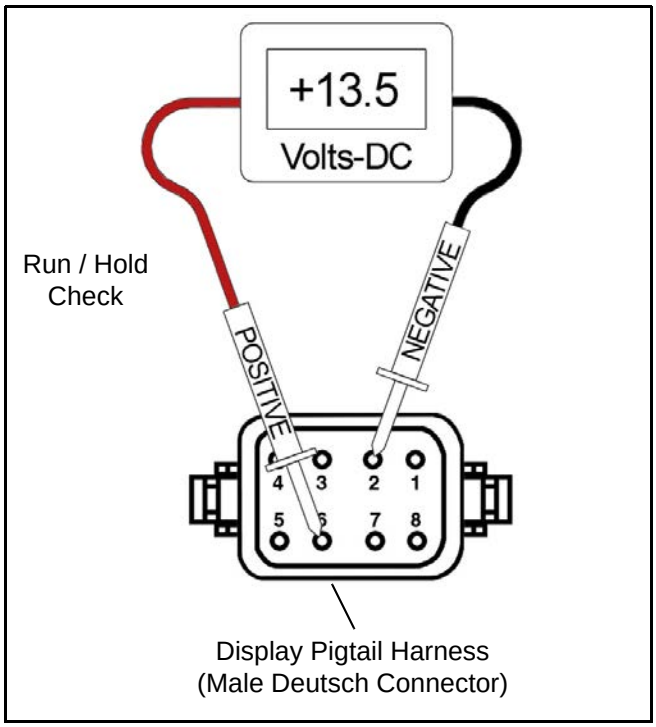

Figure 65

8.17 - Boom Section Shutoff Signal Test

Disconnect the valve driver from the power hub harness by disconnecting the 6-pin Deutsch connector.

Turn on the rate controller master switch and all section switches.

[Figure 66] - The rate controller should be sending a 13.5 VDC (engine running) or a 12.0 VDC (engine off) signal through the shutoff adapter and then the power hub. Use a voltmeter to check that signal between pins 2 and 3.

Turn off the boom shutoff switch to observe the voltage disappear.

- If no spray or voltage is observed, trace the voltage signal from the rate controller harness (each section wire) through the CapstanAG™ boom shutoff adapter to the power hub.

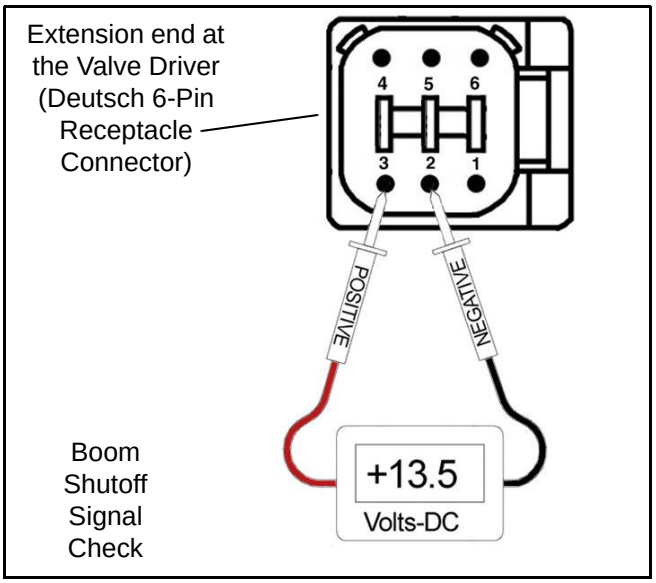

Figure 66

9.0 - WARRANTY

LIMITED WARRANTY

Rev Date: 7/15/2014

A. What does the Limited Warranty cover?

The ultimate purchaser/user ("you"), by acceptance of seller Capstan Ag Systems, Inc.'s, ("our," "we," or "us") product, assume all risk and liability of the consequences of any use or misuse by you, your employees, or others.

All replacement components furnished under this warranty, but shipped before the failed component is returned for evaluation, will be invoiced in the usual manner and warranty adjustments will be made after the component claimed to be defective has been returned to and inspected and deemed defective by us at our factory.

Upon determining that a component has failed under warranty, the repaired component or replacement component, furnished under this warranty, will be shipped at our expense, to your location. We will credit you an amount equal to the incoming freight you paid. We shall not be responsible for installation costs. (You shall be responsible for all customs and brokerage fees for all international transactions.)

If the component does not prove to be defective, you shall be liable for all freight, inspection and handling costs. In no event will any claim for labor or incidental or consequential damages be allowed for removing or replacing a defective product. Warranty will be denied on any component which has been subject to misuse, abuse, accidents, or alterations, or to improper or negligent use, maintenance, storage or transportation and handling.

Our liability under this warranty, or for any loss or damage to the components whether the claim is based on contract or negligence, shall not in any case exceed the purchase price of the components and upon the expiration of the warranty period all such liability shall terminate. The foregoing shall constitute your exclusive remedy and our exclusive liability.

The terms of this warranty do not in any way extend to any product which was not manufactured by us or one of our affiliates.

While necessary maintenance or repairs on your Capstan Ag Systems, Inc. product can be performed by any company, we recommend that you use only authorized Capstan Ag Systems, Inc. dealers. Improper or incorrectly performed maintenance or repair voids this warranty.

The foregoing warranty is exclusive and is in lieu of all other warranties expressed or implied. We shall not be liable for any incidental or consequential damages resulting from any breach of warranty.

Your exclusive remedy for breach of warranty shall be repair or replacement of defective component(s): Provided, if the component(s) are incapable of being repaired or replaced, your exclusive remedy shall be credit issued, but such credit shall not exceed the purchase price of the components.

On any claim of any kind, including negligence, our liability for any loss or damage arising out of, or from the design, manufacture, sale, delivery, resale, installation, technical direction of installation, inspection, repair, operation of use of any products shall in no case exceed the purchase price allocable to the components.

In no event, whether as a result of breach of contract or warranty or alleged negligence, shall we be liable for incidental or consequential damages, including, but not limited to: personal injury, loss of profits or revenue, loss of use of equipment or any associated equipment, cost of capital, cost of substitute equipment, facilities or services, downtime costs, environmental damage, crop losses, or claims of customers of you for such damages.

B. What is the period of coverage?

We warrant to you, that our products are free from defects in material and workmanship in normal use and service for a period of one year from date of purchase.

C. How do you get service?

Our obligation under this warranty shall be limited to the repairing or replacing at our option, the component which our inspection discloses to be defective, free of charge, return freight paid by us, provided you: (i) Notify us of defect within thirty (30) days of failure; (ii) Return the defective component to us, freight prepaid; (iii) Complete the Owner Registration Form and returned it to us; and (iv) Establish that the product has been properly installed, maintained and operated in accordance with our instructions or instructions contained in our operations or maintenance manuals and within the limits of normal usage.

Any claim for breach of our warranty must be in writing addressed to us and must set forth the alleged defect in sufficient detail to permit its easy identification by us. All breach of warranty claims must be made within thirty (30) days after expiration of the warranty period which is applicable to the defective product. Any breach of warranty claim not timely made will not be honored by us and will be of no force and effect.Any component that needs to be repaired or evaluated for warranty has to be authorized before return. Contact the factory (785-232-4477) to get a Return Materials Authorization (RMA #). This helps to track the part coming into the factory for repair or replacement.

Before returning any component to the factory, clean the component as well as possible to remove any dirt or chemical residue. Components received at the factory that are not clean, will be returned and warranty denied.

After receiving your RMA #, package the part, making sure to include the RMA #, your name, customer's name, your address and phone number and description of problems or failure. Then ship to:

Capstan Ag Systems, Inc.
Attn: Warranty/Repair
4225 SW Kirklawn Ave.
Topeka, KS 66609

Phone: (785) 232-4477
Fax: (785) 232-7799
Hours: 8 a.m. - 4:30 pm CST

D. How does state law relate to this Limited Warranty?

Some states do not allow limitations on how long an implied warranty lasts, so the above limitation may not apply to you.

Some states do not allow the exclusion or limitation of incidental or consequential damages, so the above limitation or exclusion may not apply to you.

This warranty gives you specific legal rights, and you may also have other rights which vary from state to state.

10.0 - GENERAL SYSTEM PARTS AND LAYOUT

GENERAL SYSTEM PARTS AND SYSTEM LAYOUT

10.1 - General System Parts

SHARPSHOOTER® with RATE® SYNC SYSTEM BASE KIT			
ITEM	PART NUMBER	DESCRIPTION	QTY.
1	118550-002	SharpShooter® with Rate Sync® Display	1
2	118600-012	Power Hub	1
3	116301-001	Pressure Sensor Assembly - 100 psi	1
4	118200-035	Pressure Sensor Adapter Harness	1
5	118676-001	Power Harness - 40 ft	1
	118655-002	Power Harness - 25 ft	
6	118605-001	50 A Power Disconnect Kit	1
7	118200-033	Cab Box Pigtail - 10 ft	1
Not Shown	120140-016	DB9 x 15 ft Serial Extension	1
Not Shown	118640-107	Power Hub Cover, Assembly	1
Not Shown	118703-002	SharpShooter® with Rate Sync® Installation Kit	1
Not Shown	116200-045	2-Pin Tower Weather Pack Dust Plug	20
Not Shown	116200-046	3-Pin Tower Weather Pack Dust Plug	11
Not Shown	706530-348	6-Pin Deutsch Dust Plug	7

BOOM HARNESS			
ITEM	PART NUMBER	DESCRIPTION	QTY.
8	117501-005	8 Nozzle x 20 inch Spacing	As Req.
	117501-022	8 Nozzle x 15 inch Spacing	
9	117501-006	4 Nozzle x 20 inch Spacing	
	117501-023	4 Nozzle x 15 inch Spacing	
10	116200-002	1 Nozzle x 20 inch Spacing	
11	116200-013	Nozzle Alternator	
Not Shown	116200-032	Y-Adapter 3-Cond.	
Not Shown	118640-032	Y-Adapter 6-Cond.	
Not Shown	118673-001	Extension 2 Cond. x 5 ft	

BOOM EXTENSION HARNESS			
ITEM	PART NUMBER	DESCRIPTION	QTY.
12	118650-005	6 cond x 5 ft - 14/18 ga, DT	As Req.
	118650-010	6 cond x 10 ft - 14/18 ga, DT	
	118650-015	6 cond x 15 ft - 14/18 ga, DT	
	118650-020	6 cond x 20 ft - 14/18 ga, DT	
	118650-025	6 cond x 25 ft - 14/18 ga, DT	
	118650-030	6 cond x 30 ft - 14/18 ga, DT	
	118650-035	6 cond x 35 ft - 14/18 ga, DT	
	118650-040	6 cond x 40 ft - 14/18 ga, DT	
	118650-045	6 cond x 45 ft - 14/18 ga, DT	
	118650-050	6 cond x 50 ft - 14/18 ga, DT	
	118650-055	6 cond x 55 ft - 14/18 ga, DT	

BOOM EXTENSION HARNESS			
ITEM	PART NUMBER	DESCRIPTION	QTY.
12 Cont.	118650-060	6 cond x 60 ft - 14/18 ga, DT	As Req.
	118650-065	6 cond x 65 ft - 14/18 ga, DT	
	118650-070	6 cond x 70 ft - 14/18 ga, DT	
	118650-080	6 cond x 80 ft - 14/18 ga, DT	
	118650-090	6 cond x 90 ft - 14/18 ga, DT	
	118650-100	6 cond x 100 ft - 14/18 ga, DT	
	118650-110	6 cond x 110 ft - 14/18 ga, DT	
	118650-120	6 cond x 120 ft - 14/18 ga, DT	

DISPLAY EXTENSION HARNESS			
ITEM	PART NUMBER	DESCRIPTION	QTY.
13	118200-030	20 ft	As Req.
	118200-031	40 ft	

NOZZLE VALVE ASSEMBLY			
ITEM	PART NUMBER	DESCRIPTION	QTY.
14	116190-111	TeeJet - OM Coil	As Req.
	116290-111	Arag - 7W, Coil	As Req.
	116390-111	Wilger - OM Coil	As Req.
	116290-211	Arag - High Flow, 7W, Coil	As Req.
	116290-215	Arag - High Flow, 12W, 5/32, Coil	As Req.

GPS ADAPTER CABLE			
ITEM	PART NUMBER	DESCRIPTION	QTY.
15	120044-001	RoGator RG900B/ RG1100B/ RG1300B - MY2016	As Req.
	120046-001	2014, NH/Miller Smart Trax	
	120047-001	JD	
	120048-001	NH Guardian Intellisteer, Case Patriot AccuGuide, 373 Receiver	
	120049-001	Y-Adapter Raven	
	120051-001	JD, 4630, R4023	
	120052-001	15 ft - CFX, FM-750, FMX FM-1000 & TMX	

VALVE DRIVER MODULE			
ITEM	PART NUMBER	DESCRIPTION	QTY.
Item	**PN**	**Description**	Qty.
16	118400-004	Valve Driver Module	As Req.

BOOM SHUTOFF HARNESS			
ITEM	PART NUMBER	DESCRIPTION	QTY.
17	118606-001	6-Pin Shroud Pigtail	As Req.
	118606-002	Case SPX	
	118606-101	Apache - Pre 2011 - 1-10 Section	
	118606-102	Apache - 2011-2017 - 1-10 Section	
	118606-200	RoGator - 90 ft/100 ft - 5-Section	
	118606-201	RoGator - 120 ft 7-Section	

BOOM SHUTOFF HARNESS			
ITEM	PART NUMBER	DESCRIPTION	QTY.
17 Cont.	118606-203	RoGator - RG700 Series	As Req.
	118606-204	RoGator - RG900, RG1100, RG1300	
	118606-308	JD 4630 5 Section (Obselete)	
	118606-300	JD 4730/4830 - 7-Section	
	118606-301	JD 4940 - 11-Section	
	118606-302	JD 4930 Ground Switched	
	118606-303	JD 4720	
	118606-304	JD R4030/R4038/R4045 - 7- Section	
	118606-305	JD R4030/R4038/R4045 - 9-Section	
	118606-306	JD R4030/R4038/R4045 - 11-Section	
	118606-400	New Holland/Miller - Before 2013 - 1-10 Section	
	118606-401	New Holland/Miller - 2013 and after - 1-10 Section	
	118606-500	Hagie - 120 ft - 9-Section	
	118606-501	Hagie - 90 ft/100 ft - 9-Section	

10.3.1 - SharpShooter® with Rate Sync® General System Layout

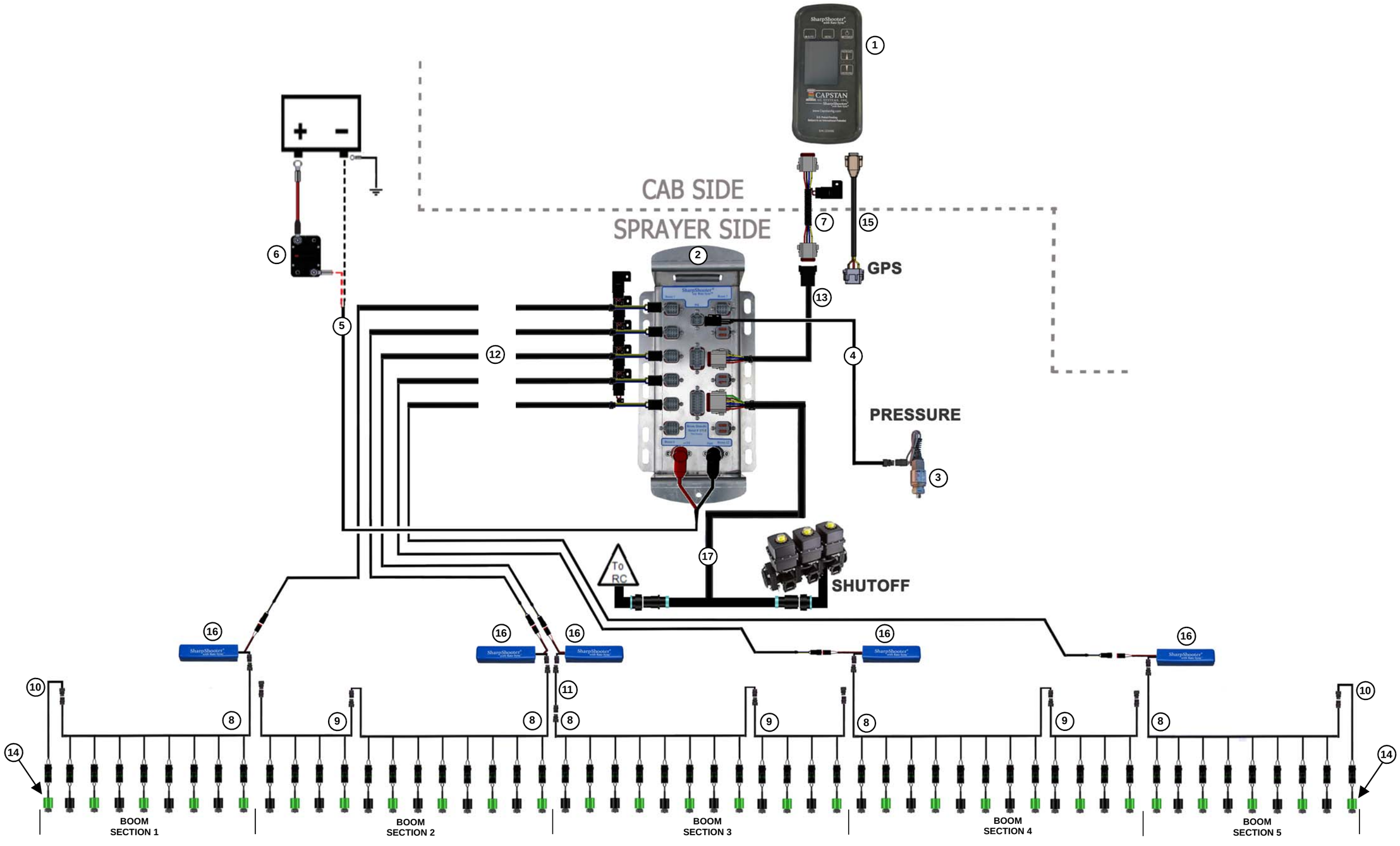

THIS PAGE IS INTENTIONALLY LEFT BLANK

INDEX

THIS PAGE IS INTENTIONALLY LEFT BLANK

APPLICATION SYSTEMS
FOR PROFESSIONALS

P/N 118156-002 Rev. B | Revised 06/2017 |