SharpShooter™
With Rate Sync™
for Turf

Operator and Maintenance Manual

CapstanAG

APPLICATION SYSTEMS
FOR PROFESSIONALS™

www.capstanAG.com

How Can We Help?
855-628-7722
prodsupport@capstanag.com

P/N 118556-002 Rev. B | Revised 10/2017 | ©2017 Capstan Ag Systems, Inc.

CapstanAG™

Thank you for your business!

At CapstanAG, our goal is to redefine the way people do their chemical application. Our PWM control systems have been setting the bar for maximum productivity for more than 20 years. Our focus on performance, support, and education have dramatically changed the landscape of agricultural chemical application.

CapstanAG specializes in creating proprietary systems for the agricultural industry, primarily focusing on chemical and fertilizer applications. Our inventive process involves research, engineering, design, and lab and field testing.

Service Contact Information

If a problem occurs with your system that cannot be corrected with the information in this manual, please contact your dealer for service and technical assistance. If further assistance is needed, contact CapstanAG.

System Purchased: _____

Dealer: _____

Contact: _____

Phone: _____

Address: _____

City,State/Province, Zip: _____

Factory Service/Repairs

CapstanAG
4225 S.W. Kirklawn Ave. | Topeka, KS 66609

Hours: 8:00 a.m. to 4:00 p.m. CST

Toll-free number: (855) 628-7722 | Fax: (785) 232-7799

E-mail: prodsupport@capstanag.com | Online: www.CapstanAG.com

SharpShooter® and Rate Sync® are Registered Trademarks of Capstan® Ag Systems, Inc.

SharpShooter® and Rate Sync® may be covered by one or more of U.S. Patents.
For more information, visit www.BlendedPulse.com.

©2017 Capstan® Ag Systems Inc., All Rights Reserved.

CONTENTS

SAFETY 1
Signal Words 1
Safety Signs 1
Pressurized Fluid Lines 2
Personal Protective Equipment 2
Battery Safety 2
Chemical Safety 2
Emergency Safety 2

INTRODUCTION 3
This Manual 3
System Identification 3

OPERATION 5
Operation Objectives 5
Solving Challenge 1: Speed and Rate Ranges 5
Solving Challenge 2: Drift or Spray Pattern Collapse 5
Solving Challenge 3: Rate Control 5
Cab Display 6
Error Messages 7
Specific Screens 8
Emergency Spraying 15
When the display will not automatically control pressure but still pulses 15
When the display will not automatically control pressure and does not pulse 15
When the rate controller or flow meter fails and the system continues to pulse 15
Tip Selection and Capacities 16
For Dual Solenoid - Boost Nozzles 16
For Single Solenoid - Non-Boost Nozzles 16

MAINTENANCE 17
Service the Spray System 17
Rinse the Product Tank and Boom Line 17
Clean the Spray System 17
Inspect the Spray System 17
Jump Start/Charge/Weld ON 17
Winterize for Storage 17
Strainers and Screens 18

TROUBLESHOOTING 21
Recommended Guidelines 21
Baseline Evaluation Process 21
System Testing and Tuning 22
Make Sure That the Display Has Power 22
Make sure that the solenoids match the rate controller section switches 22
Wet Test 1 - Flow Control 23
Check the Flow Control Valve and Rate Controller 25
Wet Test 2 - Pressure Control 25
Wet Test 3 - Integrated Pressure and Flow Control 26
Wet Test 4 - Immediate On/Off 28
Wet Test 5 - Rate Optimization 29
System Performance Optimization 30
General Spray Operation Strategies 30
Interchange the Components 30
Troubleshooting Chart 31
Fuses 32
Component Testing 33
Nozzle Valves 33
Clean the Nozzle Valve(s) 34
Inspect the Plunger Seal 35
Coil Test 35

Check the Battery Voltage 36
Check the System Load Capacity 36
Check The Valve Driver Voltage 37
Check the Pulse Circuit
(Display Output) 37
Check the Valve Driver Output 38
Check the Valve Driver Input 38
Test the Pressure Sensor Signal 39
Check the Power to the Pressure Sensor Input 40
Test the Boom Section Run/Hold Signal 41
Check the Boom Section Shutoff Signal 42
Technical Bulletin - July 11, 2001 (revised May 12, 2017) 43

WARRANTY 45

SCHEMATICS 47
General System Layout 47
Power Hubs 48
9-Nozzle Power Hub - 15 ft
(P/N - 118600-250) - Boost 48
11-Nozzle Power Hub - 18 ft
(P/N - 118600-253) - Boost 49
12-Nozzle Power Hub - 20 ft
(P/N - 118600-256) - Boost 50
9 Nozzle Power Hub - 15 ft
(P/N - 118600-260) - No Boost 51
11 Nozzle Power Hub - 18 ft
(P/N - 118600-263) - No Boost 52
12 Nozzle Power Hub - 20 ft
(P/N - 118600-266) - No Boost 53
5-Section/17-Nozzle Power Hub
(P/N - 118600-270) - No Boost 54
13-Nozzle Center Power Hub
(P/N - 118600-273) - No Boost 55
Left Boom Harness 56
3 or 9-Section/9-Nozzle Left Boom Harness (Nozzles 1 to 3) - 15 ft
(P/N - 118600-251) - Boost 56
3 or 10-Section/11-Nozzle Left Boom Harness (Nozzles 1 to 4) - 18 ft
(P/N - 118600-254) - Boost 56
3 or 10-Section/12-Nozzle Left Boom Harness (Nozzles 1 to 4) - 20 ft
(P/N - 118600-257) - Boost 57
3 or 9-Section/9-Nozzle Left Boom
Harness (Nozzles 1 to 3) - 15 ft
(P/N - 118600-261) - No Boost 57
3 or 10-Section/11-Nozzle Left Boom Harness (Nozzles 1 to 4) - 18 ft
(P/N - 118600-264) - No Boost 58
3 or 10-Section/12-Nozzle Left Boom Harness (Nozzles 1 to 4) - 20 ft
(P/N - 118600-267) - No Boost 58
5-Section/17-Nozzle Left Boom
Harness (Nozzles 1 to 7)
(P/N - 118600-271) - No Boost 59
3-Section/13-Nozzle Left Boom Harness
(P/N - 118600-274) - No Boost 59
Right Boom Harnesses 60
3 or 9-Section/9-Nozzle Right Boom Harness (Nozzles 7 to 9) - 15 ft
(P/N - 118600-252) - Boost 60
3 or 10-Section/11-Nozzle Right Boom Harness (Nozzles 8 to 11) - 18 ft
(P/N - 118600-255) - Boost 60
3 or 10-Section/12-Nozzle Right Boom Harness (Nozzles 9 to 12) - 20 ft
(P/N - 118600-258) - Boost 61
3 or 9-Section/9-Nozzle Right Boom Harness (Nozzles 7 to 9) - 15 ft
(P/N - 118600-262) - No Boost 61

3 or 10-Section/11-Nozzle Right Boom Harness (Nozzles 8 to 11) - 18 ft (P/N - 118600-265) - No Boost 62
3 or 10-Section/12-Nozzle Right Boom Harness (Nozzles 9 to 12) - 20 ft (P/N - 118600-268) - No Boost 62
5-Section/17-Nozzle Left Boom Harness (Nozzles 11 to 17) (P/N - 118600-272) - No Boost 63
3-Section/13-Nozzle Right Boom Harness (P/N - 118600-275) - No Boost 63
Valve Driver Module 64
8-Pin DT (P/N - 118400-020) 64
Power Harness 65
Power Harness - 14 ft for SmithCo/Toro/FS Manufacturing (P/N - 118600-107) 65
Power Harness - 18 ft for Jacobsen (with 5A fuse) (P/N - 118600-109) 65
Display 66
Display Extension Harness 67
Boom Shutoff Harness 68
3-Section/13-Nozzle Boom Shutoff Harness - John Deere (P/N - 118602-103) 68
3-Section/11-Nozzle Boom Shutoff Harness - John Deere (P/N - 118602-104) 69
5-Section/17-Nozzle Boom (Specialty Enterprise Booms) (P/N - 118602-105) - No Boost 70
3-Section/11-Nozzle Raven 440 Boom (Spade Terminals) (P/N - 118602-115) 71
3-Section/9-Nozzle Raven 440 Boom - Toro/FS Manufacturing (P/N - 118602-117) 72
9-Section/9-Nozzle - Jacobsen (P/N 118602-118) 73
3-Section/9-Nozzle - Jacobsen (P/N 118602-119) 73
10-Section/11-Nozzle Raven Envizio Boom - SmithCo/Toro (P/N - 118602-127) 74
10-Section/12-Nozzle Raven Envzio Boom SmithCo/Toro (P/N - 118602-128) 75
9-Section/9-Nozzle Raven Envizio Boom - SmithCo/Toro (P/N - 118602-129) 76
10-Section/11-Nozzle Raven Envizio Boom - Jacobsen (P/N - 118602-120) 77
3-Section/11-Nozzle Raven 440 Boom - Toro/FS Manufacturing (P/N - 118602-121 Rev. A) 78
3-Section/11-Nozzle Raven 440 Boom (Spade Terminals) SmithCo/John Deere - 2015 and before (P/N - 118602-124 Rev. A) 79
3-Section/11-Nozzle Raven 440 Boom - Jacobsen (P/N - 118602-121 Rev. B) 80
10-Section/12-Nozzle Raven Envzio Boom - Jacobsen (P/N - 118602-122) 80
3-Section Raven 440; 12-Nozzle Boom - Jacobsen (P/N - 118602-123 Rev. B) 81
3-Section/9-Nozzle Raven 440 Boom (Spade Terminals) SmithCo (P/N - 118602-125) 81
3-Section/12-Nozzle Raven 440 Boom (Spade Terminals) SmithCo (P/N - 118602-126) 83
Pressure Sensor Extension Harness 84
Pressure Sensor Extension Harness (P/N 118600-108) 84
Pressure Sensor Extension Harness P/N 620202-023 85
Pressure Sensor 85
100 psi Pressure Sensor - P/N 116301-001 85
100 psi Pressure Sensor Gems - P/N 116301-010 86

INSTALLATION AND SETUP 87
Parts Identification 87
Display 87
Display Extension Harness 87
Boost (Two Solenoids) Nozzle Power Hub 88
No Boost (One Solenoid) Nozzle Power Hub 89
Left Boom Harness - Boost 89
Left Boom Harness - No Boost 90
Right Boom Harness - Boost 90

Right Boom Harness - No Boost 90
Valve Driver Module 91
Pressure Sensor 91
Pressure Sensor Extension Harness (if equipped) 91
Power Harness 92
Boom Shutoff Adapter Harness 93
Y-Adapter Harness 94
Battery Power Cable 95
Dust Plugs 95
Nozzle Valve Assembly 96
Tips 97
Wilger Nozzle Bodies 98
Hypro Dry Boom Adapters 99
Pressure Sensor Breakout Harness 99
Original Equipment Manufacturer Kits 100
Serviceable Parts 100
Display Software 102
Update Cab Box Software 102

INDEX 105

SAFETY

SIGNAL WORDS

FIGURE 1: Signal words designate a degree or level of hazard seriousness.

DANGER: indicates an imminent hazard which, if not avoided, will result in death or serious injury. This signal word is limited to the most extreme situations, typically for machine components that, for functional purposes, cannot be guarded.

WARNING: indicates a potential hazard which, if not avoided, could result in death or serious injury, and includes hazards that are exposed when guards are removed. It may also be used to alert against unsafe practices.

CAUTION: indicates a potential hazard which, if not avoided, may result in minor or moderate injury. It may also be used to alert against unsafe practices.

FIGURE 1

FIGURE 2: Important and Note

IMPORTANT: *This is used to draw attention to specific information that is necessary in the operation, setup, or service of the system.*

NOTE: *This is used for additional information that can help understand or operate the system.*

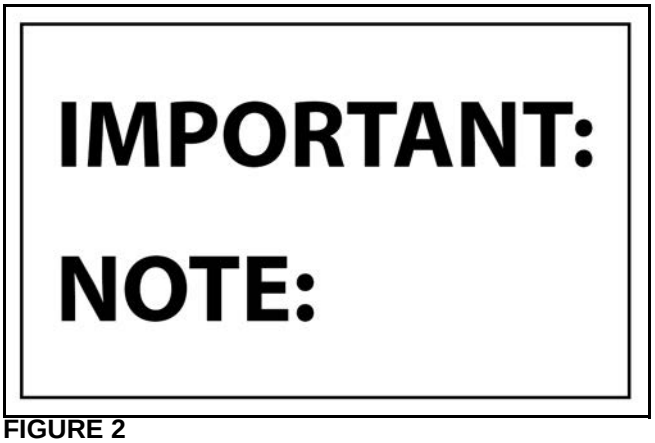

FIGURE 2

SAFETY SIGNS

FIGURE 3: The HCS aligned its provisions with the United Nations' Globally Harmonized System (GHS) Classification and Labeling of Chemicals in 2012. This is an GHS safety label example for a chemical hazard.

These labels and safety messages warn all personnel about hazardous chemicals or potentially unsafe chemical conditions that may exist while working around agricultural application equipment.

CapstanAG add-on application systems for OEM and retrofit agricultural application equipment (booms and toolbars) may contain HCS pictograms and GHS safety labels and safety signal word messages.

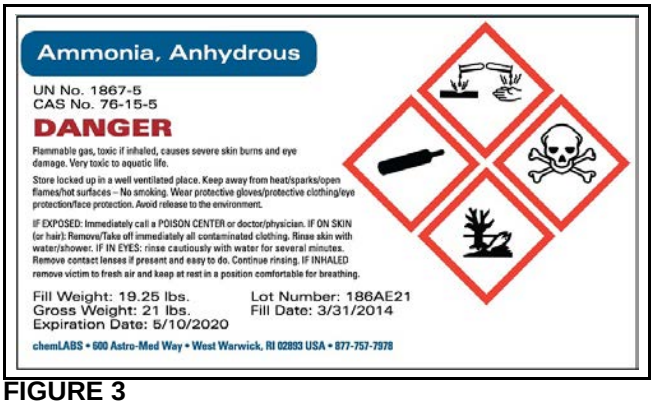

FIGURE 3

PRESSURIZED FLUID LINES

Do not heat by welding, soldering, or using a torch near pressurized fluid lines or other flammable materials. Pressurized lines can accidentally burst when too much heat is present

PERSONAL PROTECTIVE EQUIPMENT

Wear close fitting clothing and the correct personal protective equipment (PPE) for the job. See the manufacturer's manual or other information for correct PPE.

BATTERY SAFETY

Use the procedure in the appropriate agricultural equipment manual for connecting, disconnecting, and jump-starting the machine's battery.

Keep sparks and flames away from the battery. Battery gas can explode and cause serious injury. Do not smoke in the battery charging area.

Remove jewelry, which might make electrical contact and create sparks.

CHEMICAL SAFETY

Chemicals used in agricultural applications can be harmful to your health and/or the environment if not used correctly. Always follow all label directions for effective, safe, and legal use of agricultural chemicals.

EMERGENCY SAFETY

Fire extinguishing systems must meet the applicable OSHA requirements and all users of portable/fixed fire suppression equipment must know the types, limitations, and proper uses of this equipment; including hazards involved with incipient stage firefighting.

Keep emergency numbers for doctors, ambulance service, hospital, and fire department near your telephone.

Know where fire extinguishers and first aid kits are located and how to use them.

Inspect the fire extinguisher and service the fire extinguisher regularly.

Follow the recommendations on the instructions plate.

Very small fires can be put out (extinguished) with a fire extinguisher. Use an appropriate method to extinguish a fire (water for paper fires, and chemical extinguishers for electrical or chemical fires.

INTRODUCTION

THIS MANUAL

Make sure that all personnel have read this manual and thoroughly understand safe and correct operation and maintenance procedure. Failure to do so could result in personal injury or equipment damage.

This manual should be considered a permanent part of your system and should remain with the system when you sell it.

Right and left sides are determined by facing in the direction of forward travel of the machine the system is on.

The information, screen shots, and other illustrations were correct at the time of publication. Changes can occur without notice.

This manual contains important information on how to safely and correctly install, operate, and maintain CapstanAG equipment. These instructions will help keep personnel safe, reduce downtime, and increase the reliability and life of the equipment, its components, and related systems.

Review the safety information in the Original Equipment Manufacturer (OEM) agricultural equipment manual(s).

Follow the instructions (in this manual) for each step to make sure that work conditions in and around the OEM equipment are safe.

It is important for all individuals working with chemicals to understand the potential risks, necessary safety precautions, and proper response in the event of accidental contact.

Review the OEM agricultural equipment manual(s) for chemical safety information.

Review, understand and read procedures and use Safety Data Sheets (SDS) and the required Personal Protective Equipment (PPE) for hazardous chemicals.

Please keep this manual and all enclosed documentation in an accessible location known to all operators, installation, and maintenance personnel.

If you do not understand the CapstanAG equipment after reading this manual, please obtain the proper training before working with equipment to make sure of your own safety and well as your co-workers' safety.

Do not attempt to operate any equipment or system until you completely understand why, when, and how it operates. If you are uncertain after studying this manual, please contact CapstanAG.

SYSTEM IDENTIFICATION

Write the system name, serial number, and other information down in the Service Contact Information on the inside cover of this manual. Your dealer will use these numbers when you order parts. File a copy of the identification numbers in a secure place off the machine.

If you are not the original owner of this machine, it is in your interest to contact your local CapstanAG dealer to inform them of this unit's serial number. This will help Capstan Ag Systems, Inc. notify you of any issues or product improvements.

NOTES

©2017 Capstan Ag Systems Inc. | SharpShooter™ with Rate Sync™ for Turf

OPERATION

OPERATION OBJECTIVES

The SharpShooter™ with Rate Sync™ system is useful in solving three basic spraying challenges that result from conventional rate controller spraying:

1. Performance limitations of single tip selection applications related to speed (slower and faster) and rate (smaller and larger) ranges.
2. Inability to independently control pressure that can contribute to excessive drift and/or lower speed spray pattern collapse.
3. Quality challenges on consistent and correct rates due to the inherent limitations of a basic rate controller applications.

Solving Challenge 1: Speed and Rate Ranges

For the tandem solenoid boosted kits, as an example, using Wilger SR110-10 on the non-boost solenoids, the SharpShooter™ with Rate Sync™ system can automatically select a tip size anywhere between 0.2 to 1.0 GPM according to the rate, speed and pressure values. With the boost feature, using the MR110-10 tips on the boost solenoids, the SharpShooter™ with Rate Sync™ system can select tips anywhere between 0.2 to 2.0 GPM. This allows the SharpShooter™ with Rate Sync™ system to select the appropriate tip to maintain a pressure set point regardless of speed or rate.

For the single solenoid/non-boost kits, automatically select the tips, as an example, using Wilger ER110-20 on the single solenoid, the SharpShooter™ with Rate Sync™ system can automatically select a tip size anywhere between 0.2 to 2.0 GPM according to the rate, speed and pressure values.

NOTE: *The sprayer can operate at a constant pressure and rate anywhere from 2 to 10 MPH at 1.0 gallons/thousand sf for fairway applications. For greens and tees, the sprayer can spray up from 0.5 to 4.0 gallons/thousand sf with typical green speeds.*

Solving Challenge 2: Drift or Spray Pattern Collapse

If winds pick up, the operator can lower the pressure set point and the SharpShooter™ with Rate Sync™ system will elect a larger effective tip size to achieve that pressure. The larger tip and lower pressure has the effect of reducing driftable fines. This drift control can be done “on-the-go” while maintaining rate and speed.

Solving Challenge 3: Rate Control

Consistent and accurate applications from “dead stop” spraying, low-speed and hill-climbing applications, and effects of boom section changes are minimized by the SharpShooter™ with Rate Sync™ systems quick ability to change the effective tips sizes.

CAB DISPLAY

FIGURE 4: The cab display has five buttons to navigate and control the system. A screen on the display shows immediate information and gives access to the menu items.

FIGURE 4

	Press the **POWER** button to turn on the display, the light behind the power button will illuminate.
	Press the **MENU** button to go the main menu list. The Menu button doubles as enter or exit through all the menu items.
	Press the **AUTO** button to enable/disable the system from automatic pressure control. The light behind will illuminate when **AUTO** mode in enabled. In **Auto Mode**, the display will automatically work to maintain an operator set target pressure. It does this by pulsing the nozzle valves at a duty cycle percentage controlled by the target pressure. ***NOTE:*** *When the system is turned on and the **AUTO** button is pressed, the SharpShooter™ with Rate Sync™ system will begin pulsing at 50% duty cycle. It will remain at 50% until the run-hold delay time has elapsed. At that time the display will begin to adjust the duty cycle to achieve the set pressure. This allows the flow control system to establish itself on initial power up before the display will regulate the pressure.*
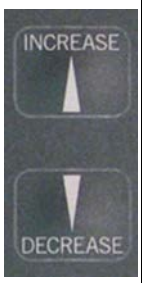	Press the **INCREASE** or **DECREASE** buttons to move through the menu items. The selected menu item is highlighted.

©2017 Capstan Ag Systems Inc. | SharpShooter™ with Rate Sync™ for Turf

FIGURE 5: Main Menu Screen

	Press the **MENU** button to go the selected information. The **MENU** button doubles as enter or exit through all the menu items.

To exit the main menu:

1. Use the **INCREASE** or **DECREASE** button(s) to highlight **Exit**.
2. Press the **MENU** button.

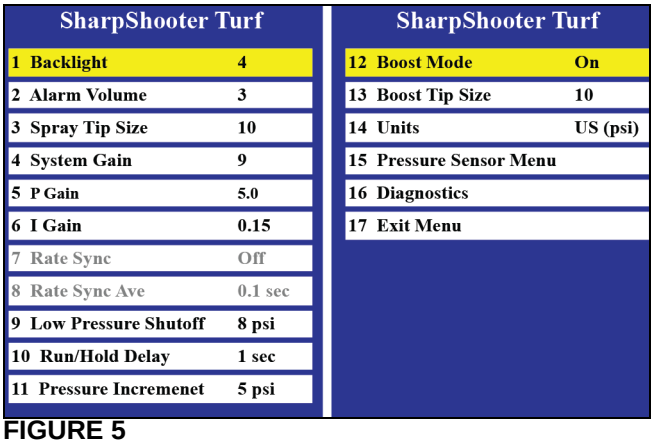

FIGURE 5

Error Messages

An alarm screen will show and the LED on the **POWER** button will flash once each second when these errors occur:

- **Pressure Sensor Error -** Present when there is no pressure acting on the sensor. Could also be pressure above or below the limits of the pressure sensor.
- **Minimum Duty Cycle -** Shows when the minimum duty cycle value is experienced.
- **Maximum Duty Cycle -** Shows when the maximum duty cycle value is experienced.
- **No GPS -** Will show when the Rate Sync™ is functioning and no GPS values are being received by the display. This error will not appear when the Rate Sync™ is set to off.
- **No GPS VTG -** Shows that the display is receiving some GPS signals but not the necessary VTG signal.
- **Low Pressure Shutoff -** When the **Low Pressure Shutoff** menu setting is 8 PSI, this readout will show when the pressure drops below 8 PSI. At this point nozzle valves will close. Nozzle valves will open and the readout will clear when pressure increases to at least 12 PSI.
- **Boost -** Shows when the Boost nozzles are on.

Specific Screens

FIGURE 6: Backlight allows choices of LCD screen brightness and backlight behind the keypad for low light conditions.

Range: 1 to 5 (Dimmest to Brightest)

When selections 1 and 2 are active (low ambient light conditions) the keypad buttons become back-lit.

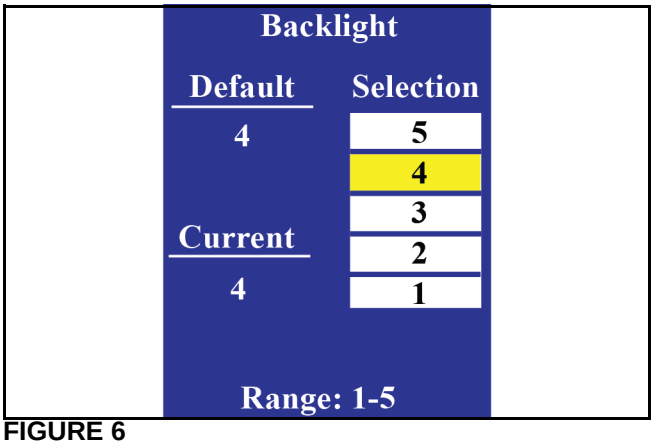

FIGURE 6

FIGURE 7: Alarm Volume menu offers personalization of the alarm function. One can choose to deactivate the alarm or select a variety of volumes.

Range: Off to 5 (Quiet to Loudest)

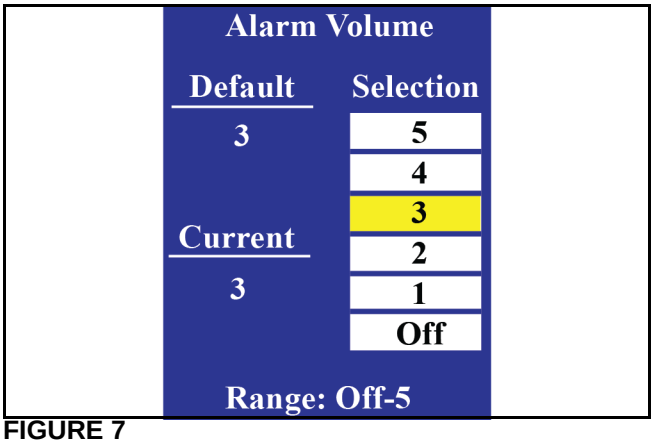

FIGURE 7

FIGURE 8: Spray Tip Size defines the tips for the non-boost row of nozzles.

It is important to choose the correct spray tip size on the display menu or the Rate Sync™ to function properly.

Range: 01 to 20

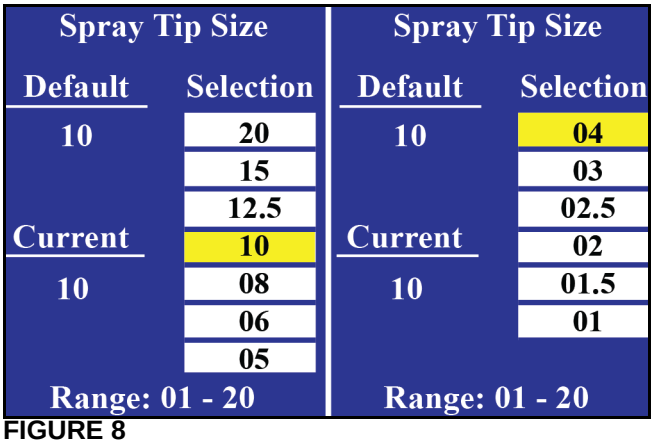

FIGURE 8

©2017 Capstan Ag Systems Inc. | SharpShooter™ with Rate Sync™ for Turf

FIGURE 9: System Gain

System Gain is the first pressure control parameter on the display menu system. System Gain changes the total response of system according to the same ratio between the individual P Gain and I Gain values. It is the first menu item to utilize when tuning the pressure control.

Increasing the system gain makes the SharpShooter™ with Rate Sync™ system react faster to pressure changes.

Decreasing the system gain makes the SharpShooter™ with Rate Sync™ system react slower to pressure changes.

Range: 1 to 14 (Slow to Fast)

Recommended Starting Value = 9

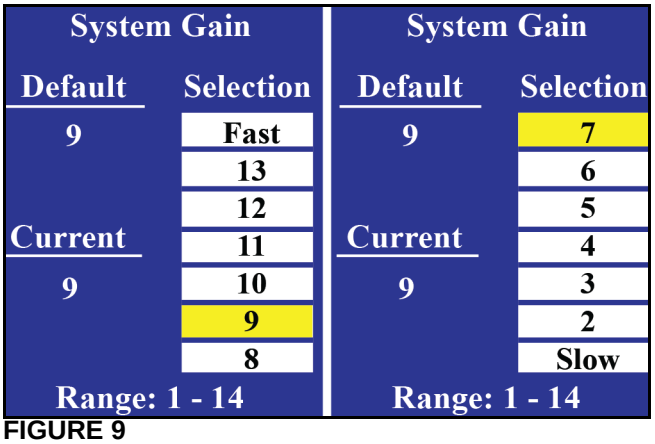

FIGURE 9

FIGURE 10: P (Proportional) Gain is the second pressure tuning parameter on the display menu. Proportional gain determines the initial speed at which the display drives the duty cycle toward the target value. Stabilize an oscillating system by selecting a lower number. Speed up a sluggish system by selecting a higher number.

Range: 2.0 to 8.5 (Slow to Fast)

Recommended Starting Value = 5

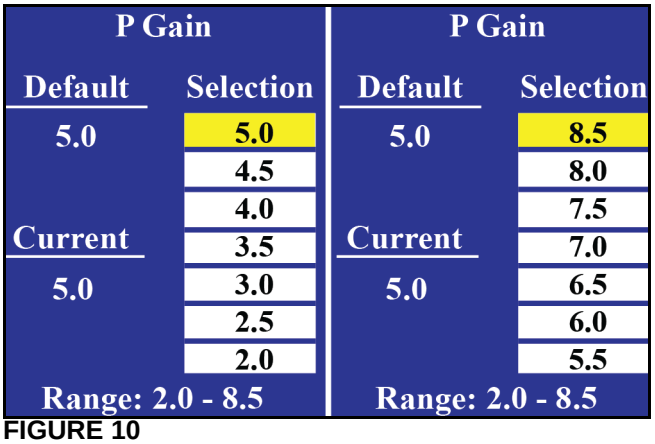

FIGURE 10

FIGURE 11: I (Integral) Gain, the third pressure tuning parameter on the display, determines the acceleration driving duty cycle to the target value. To stabilize an oscillating system, use a lower number. To speed up a sluggish system, use a higher number.

Range: 0.05 to 0.35 (Slow to Fast)

Recommended Starting Value = 0.15

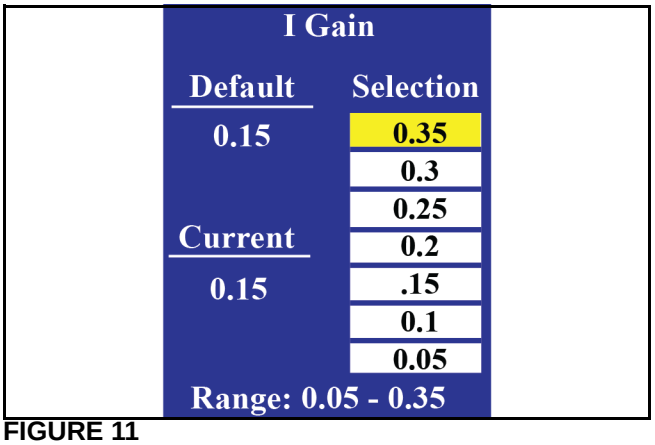

FIGURE 11

FIGURE 12: Rate Sync™ uses real time speed change to determine the proper duty cycle for the appropriate nozzle. It is used to make the SharpShooter™ with Rate Sync™ system react faster to speed changes.

10hz is optimal, but with the Rate Sync Ave being selectable, a receiver running 5hz can be used.

NOTE: *A 10 Hz NMEA GPS connection and VTG signal are required for Rate Sync™ to operate properly. If no 10 Hz NMEA GPS signal is available, the* ***Rate Sync Menu*** *option should be set to* ***Off****.*

Rate Sync™ turned off disables speed change corrections. GPS connection is not needed with Rate Sync™ off.

Range: Off/Auto

Recommended Value = Auto

Rate Sync auto allows the SharpShooter™ with Rate Sync™ system to correct the pressure quicker during speed changes based on GPS data and automatically calculating the max speed based on tip size.

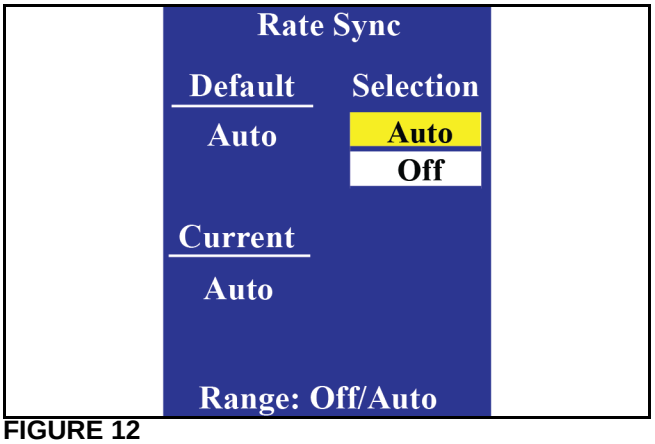

FIGURE 12

FIGURE 13: Rate Sync Ave is the time parameter used in Rate Sync™ calculations. Default setting of 0.1 second is recommended, higher settings cause Rate Sync™ to react slower.

Range: 0.1 to 0.5

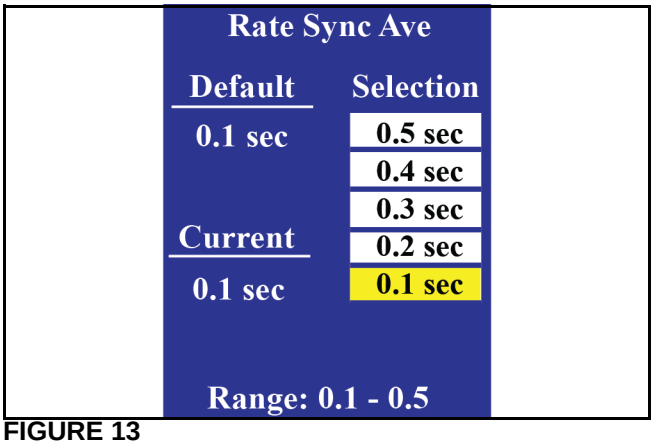

FIGURE 13

FIGURE 14: Low Pressure Shutoff allows the display to turn off the nozzle valves when the pressure decreases below 8 PSI.

This feature is intended to duplicate the effect of the nozzle drip checks found on sprayers. To alert the operator that the low pressure shutoff feature has been activated, low PSI shutoff will show on the display.

When the pressure rises above 12 PSI again, the display will pulse at 50% duty cycle for the start-up delay period and then will resume pressure control.

When set to **Off**, the display will maintain a minimum duty cycle percentage, equal to the pulse frequency, regardless of either low or zero pressure.

Range: Off/8 PSI

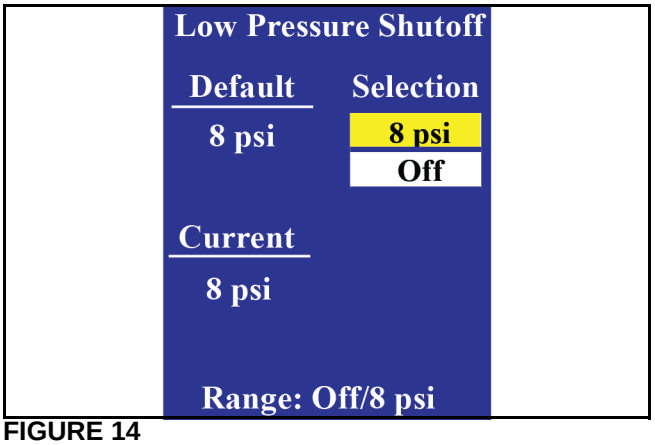

FIGURE 14

©2017 Capstan Ag Systems Inc. | SharpShooter™ with Rate Sync™ for Turf

FIGURE 15: Run/Hold Delay is the delay at startup when the display begins at a preset value (50% duty cycle) allowing for the rate controller to stabilize before making larger pressure control changes.

In **Auto Mode**, whenever the boom or all sections are off, the display will save the duty cycle effective at that moment.

When the boom is turned on and the run/hold signal is returned, the display will begin to control pressure by resuming the pulsing at the previous duty cycle before the boom was shut off.

The **Hold** readout will show on the display to alert the operator that the initialization delay has been activated. The start-up delay time is equal to the run/hold delay time.

This allows the flow control system to resume control and attain rate stability.

Once the delay period has elapsed, the display will resume pressure control.

The display will show **Hold** and count down the seconds to alert the operator that the run/hold delay has been activated. When the count down is finished, the display will show **Run**. At this point the display is controlling pressure once again.

Range: 0 to 6

While a value of 3 is the default value, for turf applications a 0 or 1 is recommended. Increasing the value allows more time for the rate to stabilize before the SharpShooter™ with Rate Sync™ pressure control activates.

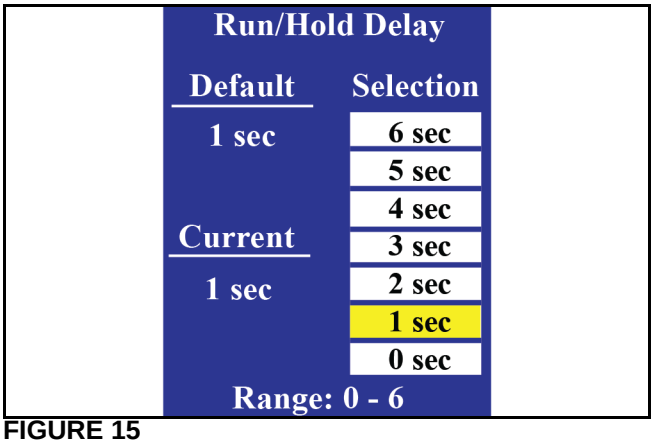

FIGURE 15

FIGURE 16: Pressure Increment allows the operator to choose the pressure increment per toggle of the **INCREASE** or **DECREASE** button in **Auto Mode**.

Range: 1 to 10

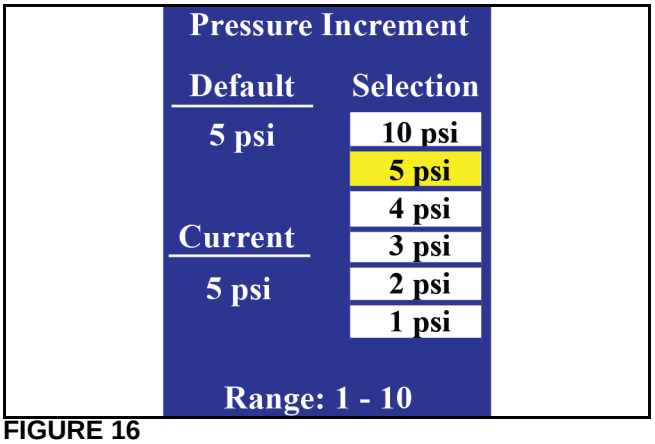

FIGURE 16

FIGURE 17: Turning on the Boost Mode activates a second row of nozzle tips to spray. The effect is to expand the range of effective tip sizes to fully utilize the product pump for a greater range of speeds and rates.

Range: Off/On

For a single solenoid non-boost system, the **Boost Mode** is always **Off**.

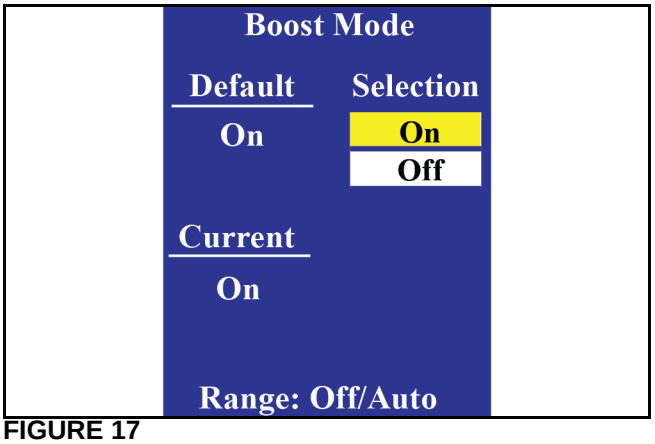

FIGURE 17

FIGURE 18: This defines the tips for the BOOST row of nozzles.

It is important to change your Boost Tip Size on the display for Rate Sync™ to function properly.

Range: 01 to 20

SharpShooter™ with Rate Sync™ for Turf comes with size 10 tips.

This option is not applicable to single solenoid non-boost systems.

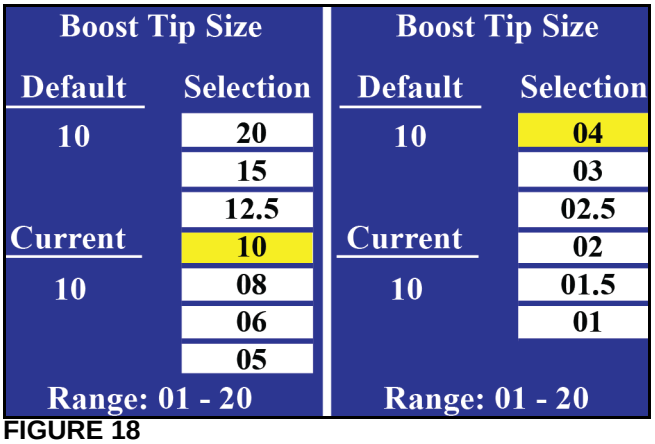

FIGURE 18

FIGURE 19: The Units menu consists of three choices for the display pressure units.

Range: US, SI

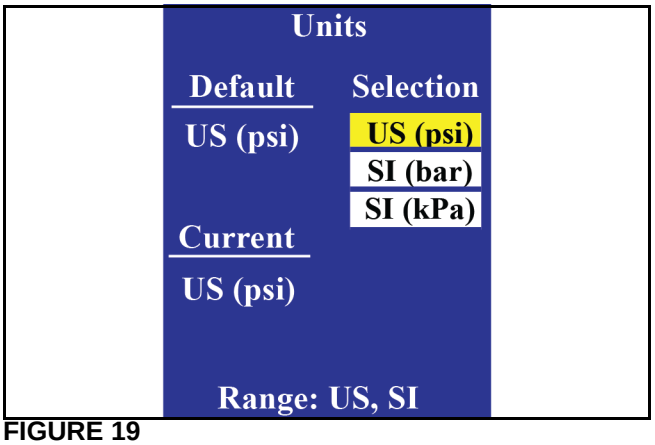

FIGURE 19

©2017 Capstan Ag Systems Inc. | SharpShooter™ with Rate Sync™ for Turf

FIGURE 20: Pressure Sensor Menu consists of pressure sensor specific parameters. Entering the **Sensor offset** and the **Sensor volt min** allows you to select appropriate equipment settings. **Sensor volt max**, **Sensor pressure min**, and **Sensor pressure max** are readouts for diagnostic purposes.

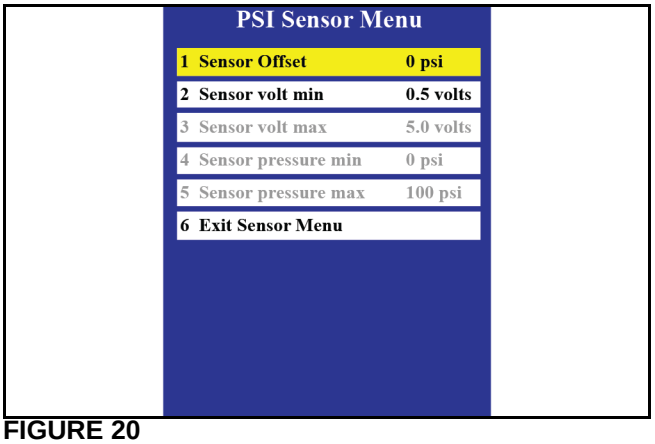

FIGURE 20

FIGURE 21: Sensor offset

Change this setting if a difference in the pressure is noticed across separate pressure sensors, such as between the display pressure reading and the rate controller pressure display from a secondary pressure sensor.

The SharpShooter™ with Rate Sync™ system requires a greater quality of pressure sensor relative to pressure sensors that only report a screen value. In most cases the adjustment of the value to the least accurate sensor is required.

Range: -10 to 10

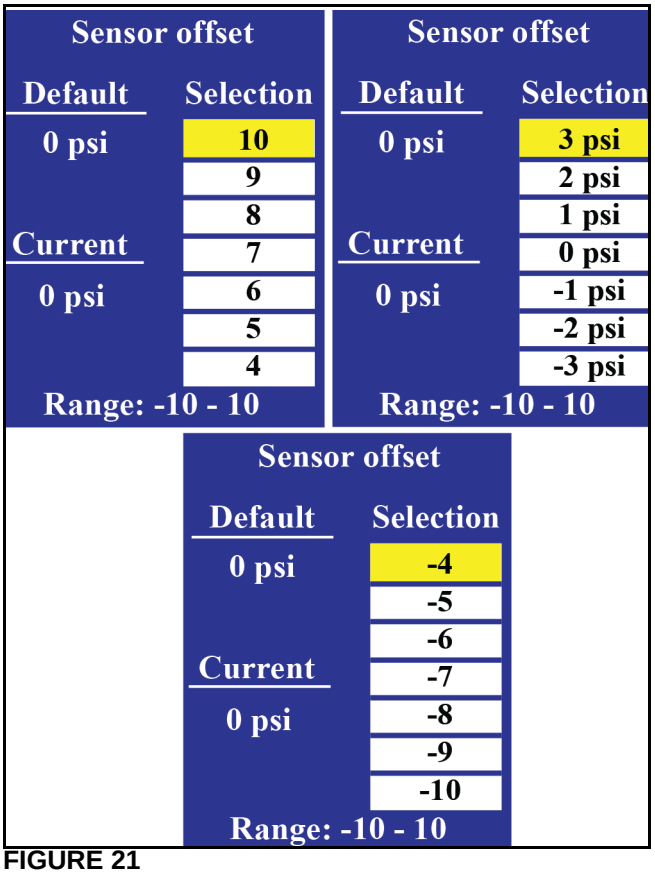

FIGURE 21

FIGURE 22: The PSI Sensors need no change from default value of 0.5. Set appropriately if using a 1.0 - 5.0 volt PSI sensor.

Range: 0.5 to1.0

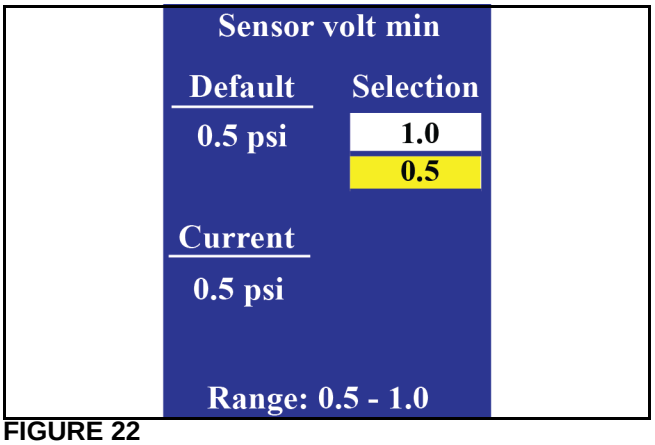

FIGURE 22

FIGURE 23: Diagnostics menu is a readout for set parameters in the SharpShooter™ with Rate Sync™ system. These may be useful in troubleshooting and/or diagnostic purposes.

NOTE: *These parameters cannot be changed.*

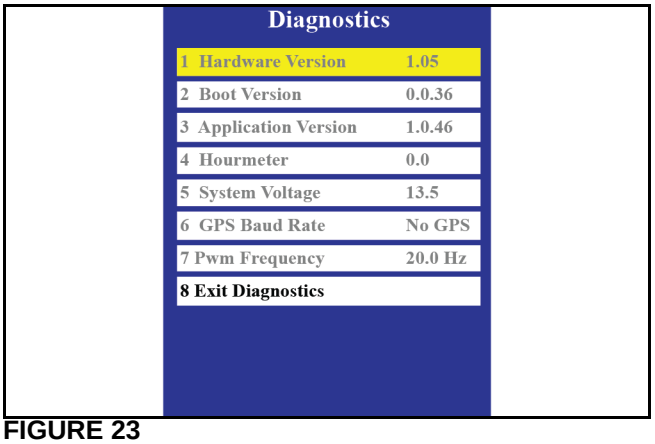

FIGURE 23

FIGURE 24: Exit Menu

Use this line item to exit the main menu structure:

1. Use the **INCREASE** or **DECREASE** button to highlight **Exit Menu**.
2. Press the **MENU** button.

   This is necessary since the **MENU** button is both the enter and exit functions.

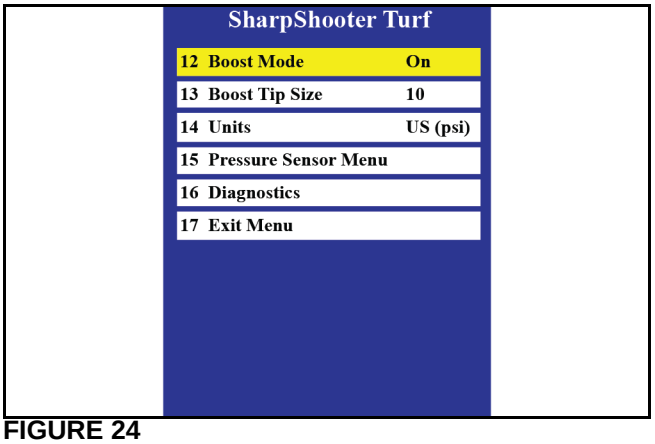

FIGURE 24

©2017 Capstan Ag Systems Inc. | SharpShooter™ with Rate Sync™ for Turf

EMERGENCY SPRAYING

The SharpShooter™ with Rate Sync™ system has been designed with several features that allow the operator to continue spraying in the event of a system or rate controller component failure.

When the display will not automatically control pressure but still pulses

- With the pulsing still functioning, turn the display to **Manual Mode** to return the operator to traditional rate controller functionality.
- In this case the **Manual Mode** acts like an electronic rotary nozzle body, but with an unlimited number of tip choices. Instead of rotating a 3-way or 5-way nozzle body on the back of the boom, the operator manually changes the duty cycle up or down to change the effective tip size as shown on the screen. If the pressure goes too high, the operator selects a larger tip. If the pressure is too low, the operator selects to a smaller tip.
- The **Manual Mode** is typically used in the event of a SharpShooter™ with Rate Sync™ pressure sensor failure. The **Manual Mode** will allow the operator to adjust the pressure range in which the rate controller operates. This pressure range can be changed on-the-go for varying spray conditions.

When the display will not automatically control pressure and does not pulse

- Turn the display off to return the operator to the traditional rate controller mode.
- A conventional tip chart will be needed to select a proper tip based on pressure and rate. The SharpShooter™ with Rate Sync™ nozzle solenoids are still powered and will act as electronic drip checks and work with the boom section On/Off switches. This feature will let the operator continue spraying until repairs can be made.
- On a Boost system, the Boost feature will need to be turned Off and the non-boost tips (SR110-10) will be sufficient. However, it may be necessary to re-size these tips based on speeds and rates applied. Check tips charts for rate, speed and pressure.
- On a single solenoid, non-boost system, the ER110-20 tips will need to the changed to a smaller tip. Check the tip charts for the rate, speed, and pressure.

When the rate controller or flow meter fails and the system continues to pulse

- Put the rate controller in the manual mode. This locks the flow control valve to a single position and eliminates the need for the flow meter and control valve.
- Put the display in **Manual Mode**. This locks in a tip size chosen by the operator. The tip size can be manually changed to select the tip needed.

NOTE: *This option lets the operator easily change back to a speed and pressure mode of application without having to change the exiting tips installed on the sprayer.*

- As an example, with conventional speed and pressure, the operator uses the conventional tip chart to select a single speed (typically 3 MPH) and an operating pressure (typically 40 PSI), then selects a tip size that would deliver the desired rate at 3 MPH and 40 PSI.
- Using SharpShooter™ with Rate Sync™ tip selection changes, select a single speed (typically 3 MPH). On the display, change the duty cycle until the machine is spraying at 40 PSI. This duty cycle is then the effective tip size needed to achieve the desire rate at 40 PSI and 3 MPH.
- The operator must continue to spray only at 3 MPH to maintain the target rate.
- The operator will need to do a test run, checking the volume and area applied. Dividing the volume by the area will serve to verify the rate. It may be necessary to change the tip size or speed to achieve the desired rate.

TIP SELECTION AND CAPACITIES

It is important to follow these rules:

- Always use 110° spray angle tips, maintain a minimum boom height of 21 in, with 24 in the preferred height above the grass.

  However if 80° spray angle tips are used, maintain the boom height at 36 in or greater.

- Never use Air Induction (AI) spray tips.
  - The SharpShooter™ with Rate Sync™ pulsing tends to squirt liquid out the air holes of the AI tips.
  - While AI tips are a good solution to the drift control challenges of rate controller spraying, the need for them is offset by the advancement of SharpShooter™ with Rate Sync™ and non-AI pre-orifice tips.

For Dual Solenoid - Boost Nozzles

- For turf spraying with rates between 1.0 gal/1000 sq ft to 2.5 gal/1000 sq ft, Wilger SR110-10 and MR110-10 tips are provided.

  The SR tips are installed on the non-boosted row of nozzles. The MR tips are installed on the boosted row of nozzles (toward the rear of the machine).

- For turf spraying where rates are consistently less than 1.0 gal/1000 sq ft (43 GPA), it is recommended to use the Wilger SR110-06 tips instead of the SR110-10 tips. This allows for a larger number of droplets for the same rate for a more thorough coverage.
- For turf spraying where rates are consistently more than 2.0 gal/1000 sq ft (86 GPA), it is recommended to use the Wilger MR110-125 instead of the MR110-10 tips on the boosted row of nozzles. This allows a larger combined effective orifice to better utilize the full pump capacity of the machine at the top end speeds.

For Single Solenoid - Non-Boost Nozzles

- For turf spraying with rates between 1.0 gal/1000 sq ft to 2.5 gal/1000 sq ft, Wilger ER110-20 tips are provided.
- For turf spraying where rates are consistently less than 1.0 gal/1000 sq ft (43 GPA), it is recommended to use the Wilger SR110-06 tips instead of the ER110-20 tips. This allows for a larger number of droplets for the same rate for a more thorough coverage.
- For turf spraying where rates are consistently more than 2.0 gal/1000 sq ft (86 GPA), the Wilger ER110-20 tips are provided.

©2017 Capstan Ag Systems Inc.| SharpShooter™ with Rate Sync™ for Turf

MAINTENANCE

SERVICE THE SPRAY SYSTEM

⚠ CAUTION

Before operation or service to the system, read and understand the machine's operator manual and the operator and maintenance manual. Chemical residue may be present on/in the OEM equipment. Make sure that the system is rinsed completely with clean water before installation or service. Use the correct personal protective equipment.

RINSE THE PRODUCT TANK AND BOOM LINE

At the end of the day and/or between chemical changes the do this rinse procedure:

1. Drain excess chemical from the tank according to standard safety practices of disposing of chemical.
2. Using a hose or a tank rinse system integrated on the machine, rinse the product tank thoroughly with clean water and drain according to standard safety practices.
3. Fill the product tank with 25 gallons of clean water. Spray the fresh water out the tank through the entire boom length making sure nozzles at each location spray.

NOTE: *Failure to properly rinse at the end of the day can cause unnecessary plugging/dripping. Failure to rinse between chemical changes could leave residual chemical that could cause damage in the next application.*

CLEAN THE SPRAY SYSTEM

Thoroughly clean the spray system with clean water after each use.

Avoid high pressure spray when cleaning the spray system components, valves, and wiring connectors.

INSPECT THE SPRAY SYSTEM

Inspect spray system hoses for cuts and other damage before each use. Replace any damaged hoses immediately.

Check for loose hoses, mounting hardware, and components. Tighten if necessary.

Make sure that all of the hoses and wiring are secure.

Make sure that the boom strainers are clean.

Check for damaged or missing decals. Replace decals if damaged or missing.

JUMP START/CHARGE/WELD ON

If jump starting the machine, trip the 80 Amp circuit breaker to prevent damage to the PinPoint™ system.

If charging the machine's batteries or welding on the machine, trip the 80 Amp circuit breaker or the machine's battery disconnect to prevent damage to the PinPoint™ control system.

WINTERIZE FOR STORAGE

Do not use fertilizer to winterize! The use of fertilizer to winterize will cause internal damage to the nozzle valves.

Thoroughly clean the spray system before winter storage.

Flush the spray system with clean water.

Winterize the spray system with RV antifreeze for winter storage. Proper winterizing of the sprayer with a CapstanAG system installed on it is essential. Make sure the booms are completely full of antifreeze at 100% strength and that the solenoids are pulsed (sprayed) for a few minutes to make sure that the antifreeze remaining in the solenoids is at full strength.

STRAINERS AND SCREENS

IMPORTANT: *Clean the strainers on a regular basis.*

Factory-built sprayers usually come with 50-mesh strainers. Check the mesh size of the strainers and replace the screens if they are too coarse.

Use 80-mesh or finer strainer screens. The filter manufacturer is specified only on the strainer housing. Only a color code identifies the strainer mesh size which is not consistent between filter suppliers.

An 80-mesh screen is required to prevent nozzles from plugging. When selecting a strainer do not rely on the color coding. Check with the strainer manufacturer to be sure and select the 80-mesh strainer.

Plugged strainers will cause a reduction in system operating pressure.

FIGURE 25: When replacing the mesh screen on the Tee-Jet strainers:

1. Install and set the mesh screen in the strainer head.
2. Install the strainer cap.

   Failure to do this will likely result in a damaged mesh screen and overall strainer failure.

FIGURE 25

FIGURE 26: When replacing the mesh screen on the Banjo strainers:

1. Install and set the mesh screen in the strainer head.
2. Install the strainer cap.

   The mesh screen will center itself.

FIGURE 26

©2017 Capstan Ag Systems Inc. | SharpShooter™ with Rate Sync™ for Turf

STRAINERS 2016 AND EARLIER				
MESH	**TEEJET**	**HYPRO**	**ARAG**	**BANJO**
30	Yellow	Red	Red	Yellow
50	Red	Blue	Blue	Red
80	Blue	Yellow	Yellow	Blue
100	Green	Green	Green	Green

NOTE: *As of 2017, the color coding has been standardized.*

STRAINERS 2017 AND AFTER				
MESH	**TEEJET**	**HYPRO**	**ARAG**	**BANJO**
30	Red	Red	Red	Red
50	Blue	Blue	Blue	Blue
80	Yellow	Yellow	Yellow	Yellow
100	Green	Green	Green	Green

©2017 Capstan Ag Systems Inc. | SharpShooter™ with Rate Sync™ for Turf

TROUBLESHOOTING

RECOMMENDED GUIDELINES

When servicing a SharpShooter™ with Rate Sync™ for Turf system, CapstanAG recommends doing this three step troubleshooting process:

1. Perform baseline service checks and verify the original system setup values in this manual.
2. Identify individual performance problems. Evaluate possible causes and corrections for performance issues.
3. Troubleshoot individual components and replace if needed.

IMPORTANT: *The primary service tool will be a simple multi-meter that can measure voltage and resistance (ohms).*

BASELINE EVALUATION PROCESS

1. Verify voltage readings.
2. Visually check all wire connections, harnesses, and connectors for loose, broken, or damaged wires.
3. Visually check all hoses for wear or damage.
4. Check the most common issues:
   a. Strainer and Filter:
      - Make sure that the strainer and filter are clean and the flow direction arrow on the filter head is orientated correctly.
      - Make sure the strainer is an 80-mesh strainer.
      - Make sure that the strainer has not been crimped by incorrect installation.

        On a TeeJet filter, the strainer must first be installed and seated in the filter head, then the filter cap is installed. If the strainer is installed in the cap first, it will not seat properly in the filter head.

   b. Solenoid Assembly:
      - If the solenoids are stuck open or closed, then there has been either a filter failure or an incomplete cleansing after an application.

        Disassemble the solenoid and clean.

        Check the solenoid plastic for damage or an excessive wear groove and replace if necessary.

        Check the coil to 19-23 ohms specification.
      - If the solenoids are dripping, then either the filter has failed and debris is preventing the solenoid from completely closing, or there is an O-ring failure, particularly the small O-ring on the tip of the solenoid.

   c. Check for incorrect or damaged tips.

   d. Using the pressure breakout harness, check the input voltage (12V) and the output signal (2.5V), when the SharpShooter™ with Rate Sync™ is in the **Manual Mode** and adjusted to attain a boom pressure of 50 PSI (2.5V).
5. Compare current settings with those recorded in this manual at setup.
6. Turn on the rate controller and make sure that the settings are correct.
7. Do a “like component swap” to see if the failure follows the component.
8. Do the system tests. Refer to the system testing in the operation section
9. Make sure that the strainer(s) are clean.
10. Repair or replace any damaged components.

SYSTEM TESTING AND TUNING

For system testing, know that the SharpShooter™ with Rate Sync™ and the rate controller can be isolated from each other for evaluation purposes.

By putting the SharpShooter™ with Rate Sync™ in the **Manual Mode**, the rate controller can be evaluated independently. The **Manual Mode** removes the automatic tip function and locks in a specific tip size (duty cycle).

Likewise putting the rate controller in manual mode removes the automatic rate control by locking the flow control valve. The SharpShooter™ with Rate Sync™ can then be evaluated independently.

Make Sure That the Display Has Power

1. Turn on the display.

   The display will turn on in **Manual Mode**. A red light on the **POWER** button will illuminate, indicating the display is operating correctly.

2. Make sure that the display screen shows **Manual Mode** and a 50% duty cycle.

This confirms that the display pigtail harness fuse is functioning and that power is being received.

SERVICE ACTIONS:

If the display does not turn on, check the fuse and/or trace the power from the battery. Check pins, connectors, and wires on the display pig tail harness for proper contact and/or damage.

Make sure that the solenoids match the rate controller section switches

1. Turn on the display.

   The display will turn on in **Manual Mode**. A red light on the **POWER** button will illuminate, indicating the display is operating correctly.

2. Make sure that the display screen shows **Manual Mode** and a 50% duty cycle.
3. Turn on the rate controller.

   An advanced rate controller will require the operator to start a job.

4. Make sure that the rate controller is in the automatic mode.
5. Turn on all section switches.
6. Turn on the master switch.

IMPORTANT: *All solenoid valves on the boom should start clicking.*

SERVICE ACTIONS:

If all the solenoids do not start clicking:

a. Make sure that the shutoff adapter harness is connected to the rate controller harness section signal wire and the power hub.
   - Make sure that the boom section signal (12 V) is coming from the controller.
   - Disconnect the boom section adapter and check the rate controller harness signal for each section switch.
   - If 12 V is present with the boom section when the switches are turned on (and 0 V when off), make sure that the boom section adapter pins match the rate controller boom signal pins.
   - If necessary, correct the pin layout of the connector.

b. Check the fuses on the valve drivers.

c. Swap the valve drivers.

   If the solenoids start pulsing, replace the bad valve driver.

   d. Trace the pulse signal from the display through the power hub to the valve driver and the solenoids.
      - Check the pins, connectors, and wires.

        The pulse voltage should read about 6 V on a DC scale.

   e. Fix or replace the failed components.

©2017 Capstan Ag Systems Inc. | SharpShooter™ with Rate Sync™ for Turf

7. Turn off all the rate controller boom sections.
8. Turn on boom section 1. A solenoid valve on boom section 1 should start clicking. Some boom sections may have more than one solenoid assigned to it.
9. Repeat steps 8 and 9 for each boom section.

SERVICE ACTIONS:

If the solenoid valves on a different boom section click on instead, the shutoff adapter is not properly connected to the appropriate rate controller harness boom section wires. Redo the connections until the correct section clicks.

Wet Test 1 - Flow Control

This test evaluates the rate controller flow control independent of the SharpShooter™ with Rate Sync™ system. It tests the SharpShooter™ with Rate Sync™ system boost function, pump, flow control valve, and flow meter functions.

1. Fill the sprayer with at least 100 gallons of water.
2. Turn on the display.

   The display will turn on in **Manual Mode**. A red light on the **POWER** button will illuminate, indicating the display is operating correctly.
3. Make sure that the display screen shows **Manual Mode** and a 50% duty cycle.
4. Turn on the rate controller.
5. Make sure that the rate controller is in the automatic mode.
6. The strainer, flow meter, and flow control valve all have embossed arrows for the proper direction of flow. Check these components for proper orientation.
7. Start a job with all section switches on and the master switch off.
8. Set a test speed of 5.0 mph.
9. Set the emergency brake to prevent movement.
10. Turn the master switch on.

    All nozzles, including the boost nozzles should start to pulse and spray.
11. Check the rate controller **UNITS** selection.
    - If the selection is **TURF UNITS**, use the INC/DEC toggle to set the rate to 1.5 gallons/thousand.
    - If the selection is **US UNITS**, set the rate to 64 GPA.
12. Turn on the sprayer product pump.
13. Slowly increase the throttle of the sprayer to maximum throttle.
14. When the sprayer has stabilized, note the boom pressure.
15. Increase or decrease the duty cycle (effective tip size) until the pressure is about 50 psi.
16. Increase the rate to 2.0 gal/thousand or 84 GPA.
    - The rate controller should get to that rate.
    - The pressure will increase and stabilize.
17. Decrease the rate to 1.0 gal/thousand or 42 GPA.
    - The rate controller should get to that rate.
    - The pressure will decrease and stabilize.
18. Put the rate at 1.5 gal/thousand or 64 GPA.
    - The rate controller should get to that rate.
    - The pressure will return to the original value.
19. If the system performs as stated, continue to Wet Test 2 - Pressure Control.
20. If the system does not do as stated, see the Service Actions:

SERVICE ACTIONS

If the rate does not stabilize or get to the target rate:

1. Make sure that the rate controller speed calibration is set correctly and not to zero.
2. Make sure that the rate controller is getting a speed signal.
   a. If doing a static test, make sure that the test speed did not go to 0.0 mph.

      If the test speed did go to 0.0 mph, reset the test speed to 5.0 mph.

   b. If moving, make sure that there is a GPS signal with adequate signal strength.

      You may need to move the machine away from buildings or from under trees.

      If the issue continues, contact your GPS dealer.
3. Make sure that the pump is on, the machine is at full throttle, and the valves for a Chem Loader attachment are closed.
4. If using a test speed, make sure that the boom section switches are at manual on and not to automatic control. If using a test speed and a rate controller with section switches that have on/auto/off selection, make sure that the switches are in the on position and not in the auto position.
5. You may have reached the pump output limit of a newer pump. If the pump is older, performance may be decreasing.
   a. Lower the speed to see if the applied rate matched the target rate.

      You may need to change the duty cycle (effective tip size) to maintain your pressure.

   b. Lower the rate and check again.
6. For boost systems, the boost feature may not be working. Make sure that both rows of nozzles are spraying.
   - If only one row is spraying, check the duty cycle.
     a. Increase your speed or rate toward 80% duty cycle.

        At 80% duty cycle the boost nozzles should start spraying.

     b. Decrease the duty cycle toward 20%.

        At 20% duty cycle the boost nozzle should stop spraying and the duty cycle should jump to 40% and then settle in at the appropriate duty cycle for that rate and speed.

If the rate still does not stabilize or achieve the target rate.

1. Check for a possible defective flow meter, pump impeller, or pump bearing components.
   a. Locate the rate controller screen to see the GPM rate reading as at the machine sprays in the rate controller automatic mode.
   b. If the GPM reading is unstable, change the rate controller to manual mode.

      This will lock the flow control valve or PWM pump valve and isolate the flow meter.
   c. If the GPM reading stabilizes, the flow control valve or PWM pump control valve is likely defective.
   d. With the rate controller in manual mode, if the GPM reading does not stabilize, then either the flow meter, pump impeller, or pump bearings are worn.
   e. If the sprayer is unstable at all rates, speeds, and pressure, the issue is likely the flow meter.
2. Set the display to 40 psi and compare the GPM reading from the rate controller to a calculated GPM using the correct formula:
   - GPM = (GPA x speed (mph) x nozzle spacing (in) x number of nozzles)/5940
   - GPM = (GPT x speed (mph) x nozzle spacing (in) x number of nozzles)/136
   - LPM = (L/Hec x speed (km/hr) x nozzle spacing (cm) x number of nozzles)/60,000

NOTE: *A test speed is not always accurate, so the calculated GPM number could be slightly off.*

   If the actual flow does not come close to the calculated flow, then either the flow meter calibration is incorrect, or the flow meter is failing and needs to be replaced. Recheck for the meter calibration number as noted on the flow meter.

3. If the sprayer rate is unstable at the low ends of the rate, speed, and pressure ranges, and/or it cannot achieve normal maximum rate, speed or pressure, the issue is possibly a worn or damaged pump impeller or bearings.

Check the Flow Control Valve and Rate Controller

1. **For a centrifugal pump:** make sure that the engine is off and rate controller is on and in manual mode, toggle the manual INC/DEC switch.

   If you can see or hear the flow control valve respond, then at least a voltage is getting to the flow control valve from the rate controller.

2. Disconnect the flow control valve harness from the rate controller harness.
3. Using a volt meter, this test should yield a +12 / -12 volt reading as you use the INC/DEC switch.
   - If the voltage is not correct, the INC/DEC switch, Raven harness, and connections should be evaluated.
   - If no defect is found, then the rate controller itself needs to be repaired.
4. A rate controller may work in manual mode, but not under load in the automatic mode.
   a. Using a test speed, set the sprayer up to begin spraying.
   b. In the automatic mode, toggle the INC/DEC switch.
   c. Check the signal wire and measure voltage to the control valve.
   d. If inadequate voltage, repair or replace the rate controller.

1. **For PWM driven diaphragm pump:** with the rate controller is manual mode, check the harness to the PWM valve for a 0 V to 12 V signal.

   If no voltage occurs, check rate controller harness and connectors for issues. Ultimately it could be an issue with the rate controller.

2. With the rate controller in automatic mode with a test speed, and spraying, toggle the INC/DEC switch. Make sure that the pump shaft changes related to the change in rpm.
   - If shaft does not spin, then the issue is likely with the rate controller.
   - If the shaft spins, but does not change in rpm with the INC/DEC, the issue could be either the PWM valve or the rate controller.

Wet Test 2 - Pressure Control

This test evaluates the pressure side control of the SharpShooter™ with Rate Sync™ system with the flow control held constant.

1. Make sure that the display is on and in **Auto Mode** at 40 psi.
2. Make sure that the rate controller is on and in manual mode.
3. Set the test speed at 4.0 mph.
4. Turn on the pump and section switches.
5. Use the master switch to start boom spraying.
6. Toggle the INC/DEC switch to adjust the rate to an acceptable value.
7. Let the sprayer get to a stable rate and pressure.
8. The SharpShooter™ with Rate Sync™ system should start pulsing.
9. Note the duty cycle reading.
10. Use the INC/DEC switch on the rate controller to increase the rate.

    The pressure should increase and the display duty cycle reading should change and then return to 40 psi.

11. Use the INC/DEC switch on the rate controller to decrease the rate.

    The pressure should decrease and the display duty cycle reading should change and then return to 40 psi.

SERVICE ACTIONS:

If the pressure does not return to 40 psi

1. Make sure that the pump is on and the machine is at full rpm.
2. Make sure that the solenoids are not plugged.
3. When using the test speed with rate controller that has section switches with on/auto/off positions, make sure that booms section switches are set to manual and not to the auto position.
4. Make sure that the display duty cycle is changing.
5. If the duty cycle is not changing:
    a. Test the pressure sensor for proper input and output signal voltages. If necessary, replace the pressure sensor if bad.
    b. Trace the pulse signal back from the solenoid pigtail harness back through the valve drivers and power hub back to the operator display.

Wet Test 3 - Integrated Pressure and Flow Control

This test evaluates if the rate controller and display are working together to achieve both flow and pressure control.

If Wet Test 1 and Wet Test 2 were successful, this test should most likely pass as well.

Wet Test 3 and Wet Test 4 can also be used as the SharpShooter™ with Rate Sync™ demo. In this case use a test speed instead of actual speed.

1. Fill the sprayer tank with at least 100 gal. of water.
2. Start the sprayer.
3. Achieve a speed of 5.0 mph.
4. If using a test speed, set the emergency brake.
5. Turn on the display and change the settings to **Auto Mode** at 40 psi.
6. Turn on the rate controller.
7. Make sure the rate controller is in automatic mode with all section switches in manual on and the master boom switch is off.
8. Set a rate of 1.0 gal/thousand if the rate controller is set to **TURF UNITS** or to 42 GPA if set to **US UNITS**.
9. Turn on the sprayer pumps and the rate controller switch.

NOTE: *Skip items 10 and 11 if your sprayer does not have boost nozzles. (Two solenoids at the nozzle location.)*

10. Watch the display duty cycle as the sprayer achieves the target rate and pressure.
    - If the display duty cycle does not reach 80%, only one row of nozzles will be spraying.
    - If the display duty cycle passes 80%, then the boost nozzles will spray and the display duty cycle will initially drop to 40% and then settle at the value needed for rate and speed to maintain the 40 psi.
11. For systems with boost, do a boost test.
    a. If both sets of nozzles are spraying, decrease the speed and rate until the display duty cycle approaches 20%.

    When you pass 20% the boost nozzles will stop spraying and the display duty cycle will initially climb to 40% and then settle at the value needed for rate and speed to maintain the pressure set point.

    b. If only one row of nozzles is spraying, observe the display duty cycle.

    Increase the speed and/or rate and watch the display duty cycle.

    Once the duty cycle reaches 80% the boost nozzles should spray.

    c. In both cases the rate controller will be working to maintain the target rate and the SharpShooter™ with Rate Sync™ system will be working to maintain the set pressure.
    d. If the boost is not working, trace the boost signal back through the valve driver and power hub to the operator display.

12. Do a flow integration test.
    a. Set the sprayer to 1.5 gallon/thousand or 64 GPA, 5.0 mph, and 50 psi.
    b. Use the INC/DEC rate controller to increase the target rate to 2.0 gallons/thousand.

       As the rate controller changes the applied rate to match the target rate, observe the pressure and the display duty cycle. The pressure will increase. The display duty cycle will also increase to create a large effective tip size and consequently bring the pressure back to 50 psi.
    c. Use the INC/DEC rate controller to decrease the target rate to 1.0 gallons/thousand.

       As the rate controller changes the applied rate to match the target rate, observe the pressure and the display duty cycle. The pressure will decrease. The display duty cycle will also decrease to create a smaller effective tip size and consequently bring the pressure back to 50 psi.
    d. Return to 1.5 gallons/thousand or 64 GPA and go to the next test.

       If the applied rate does not stabilize or meet the target rate, go to Wet Test 1.

       If the pressure does not stabilize or return to the target pressure, go to Wet Test 2.
13. Do a speed test.
    a. Set the sprayer to 1.5 gallon/thousand or 64 GPA, 5.0 mph and 50 psi and start spraying.
    b. Increase speed to 9.0 mph.

       Note that the applied rate changes and the rate controller works to match the target rate.

       Note that the pressure decreases and the display duty cycle increases to create a larger effective tip size to return the pressure to 50 psi.
    c. In the rate controller, decrease the test speed to 3.0 mph.

       Note that the applied rate changes and the rate controller works to match the target rate. Note that the pressure increases and the display duty cycle decreases to create a smaller effective tip size to return the pressure to 50 psi.
14. Do a pressure test.
    a. Set the sprayer to 1.5 gallon/thousand or 64 GPA, 5.0 mph and 50 psi and start spraying.
    b. Decrease the pressure to 20 psi, but do not change the speed.

       Observe the rate controller working to maintain the target rate as the display duty cycle increases to a larger effective tip size to drop the pressure.

       This is the drift control feature of SharpShooter™ with Rate Sync™ system. Note the larger droplets size and reduced drift.
    c. Increase the pressure to 60 psi, but again do not change the speed.

       Observe the rate controller working to maintain the target rate as the display duty cycle decreases to a smaller effective tip size to increase the pressure. Note the smaller droplet sizes and increased drift.
    d. During a demo you might want to raise the boom to further illustrate the drift impact of the SharpShooter™ with Rate Sync™ system.

SERVICE ACTIONS

1. During a demo, if the rate completely falls off, make sure that the test speed did not go to zero.

   Bumping the machine can fool the rate controller that the machine is moving and will override the test speed.

2. At the top speed, if the applied rate cannot achieve the target rate, the pump capacity may have been exceeded.

   Decrease the speed until the applied rate matches the target rate.

3. At the top speed, if the applied rate achieves the target rate, but the pressure exceeds the pressure set point the duty cycle will read 100%.

   The tips will have reached their limit and further speed will cause the pressure to increase.

   Unless there are drift concerns, it is still OK to spray.

Wet Test 4 - Immediate On/Off

This test evaluates the solenoids on/off response over the whole boom and by boom sections.

1. Fill the sprayer tank with at least 100 gal of water.
2. Turn on the display and put in **Auto Mode** at 50 psi.
3. Turn on the rate controller and set to 1.0 gal/thousand or 42 GPA with the boom section switch on and the master boom switch off.
4. Turn on the pump and increase the engine to full rpm.
5. Set the speed to 4 mph.
6. Let the booms charge and the machine to settle in on the target rate and pressure.
7. Total boom on/off:
   a. Turn the master switch off.

      Note that the nozzle solenoids stop spraying immediately. The pressure climbs to either the preset agitation value (typically 60-70 psi), or the pump dead-head pressure depending on the particular sprayer.

   b. Turn the master switch on.

      Note the nozzles start spraying immediately. The display duty cycle works to return the pressure to the target value. The rate controller works to return the rate to its target value.
8. For individual nozzles, do this test one section at a time.
   - You will notice that the speed by which individual nozzles achieve rate when turned off or on will affect the applied rate recovery to the target rate.

NOTE: *The flow control valve is the limiting factor to the applied rate achieving and maintaining the target rate. Depending on how large the target rate is, the boom can be quickly depleted of liquid before the flow control valve can open far enough. To optimize its response proceed to the rate optimization test.*

9. If all performs well, go to Wet Test 5 - Rate Optimization.

SERVICE ACTIONS

1. Check for any nozzles that are dripping.
2. Check for debris keeping the plunger open
3. Check for damaged O-rings at the tip of the solenoid.
4. Check for plugged or damaged filter.
5. Slow flow recovery could be systematic of a damaged flow control valve.

   See Wet Test 1 - Flow Control.
6. Go to Wet Test 5 - Rate Optimization

©2017 Capstan Ag Systems Inc. | SharpShooter™ with Rate Sync™ for Turf

Wet Test 5 - Rate Optimization

This test tunes the rate controller and display operating parameters for optimum performance.

NOTE: *Most of the 300 gallon sprayers have pumps and performance is optimized at 50 psi. Different units may have a different optimum pressure.*

For a PWM drive pump with 2 PWM settings:

1. Make sure that the sprayer is on and spraying
2. In the rate controller you will most likely find a MAX PWM value of 253 and a Minimum PWM value of 1.
3. The minimum PWM value needs to be set near 60, or the value that makes the pump start to rotate.
4. Typically there is also a choice of two valve types:
   - PWM Valve: In this case when the boom is shut off, the pump operating PWM value drops to the minimum PWM value. This valve type creates an issue for diaphragm pumps if there is no pressure relief circuit to limit the pressure build up past 70 psi or so.
   - PWM Close Valve: In this case when the boom is shut off, the pump stops. This creates a large issue for consistent spraying and from spraying from a dead stop. It is done to prevent a diaphragm pump from continually building pressure that could ultimately burst hoses, etc. This is overcome by continually using an agitation circuit as a pressure relief circuit. Therefore the rate controller will have a Preset Agitation PWM setting to maintain a 60 psi to 70 psi agitation pressure when the booms are off. Often users think the Preset Agitation is a pressure and set it too low. That PWM value is typically around 100 to achieve a 60 psi to 70 psi agitation pressure.

For Advanced Rate Controllers with three PWM values:

The three PWM values are: Maximum (253), Minimum (60) and PreSet which is a value you may want to change depending on a green/tee or fairway application. In general this is the value the PWM goes to when the boom stops spraying. The smaller the difference between the operating PWM value and the Preset Value is, the more optimum is the sprayer response and performance.

To determine the Preset PWM value:

1. Find the location in the rate controller where you can monitor the PWM value while spraying.
2. On fairways, using the maximum speed (typically 8 mph to 9 mph) and your rate determine the operating PWM value that will determine the Preset Value you want to use. With any Preset Value you use, check the boom-off pressure. It should not exceed 100 psi. If the pressure is too high, the Preset PWM will have to be lowered.
3. Do the same with the greens and tees. Given that the rates are higher and speeds are lower for greens, it would not be unusual for the two PWM values to be close.
4. If these two values are different, consider editing the Preset Value for the two applications.
   - The object is to minimize the recovery time of the pump to resupply the boom when changes to speed, boom section or rate occurs.
   - In both cases above, it is then possible to adjust the rate controller valve calibration for a faster response, but yet stable response.

For an engine driven centrifugal pump with an in-line flow control valve:

1. Tune the valve calibration from 2123.
2. Then increase the third digit from the right most 1 (velocity of change) one number at a time.

   Increasing the number makes the valve respond faster. Try 2143, 2243, or 2343.
3. Try varying the second digit from the right most 2 (deceleration timing).

   Increasing the number lengthens time and is more stable. Try 2133, or 2143.
4. Test each setting the balance of speed and stability.

   Typically when you increase the speed, you also need to increase the deceleration time.

SYSTEM PERFORMANCE OPTIMIZATION

Timing and speed of control helps reduce issues with dead stop spraying, boom section changes, and dramatic speed changes, that can affect application quality.

There are generally three parameters that are effective in tuning the display control relative to a rate controller. All

three are accessible by pressing the **MENU** button.

- Run/Hold setting (default value is 3 seconds)

  This value allows the rate controller to stabilize before the display begins to control pressure. This delay (hold) period prevents instability as the rate controller and display work to control rate and pressure.

  Decreasing that time allows the display to start controlling the pressure sooner. In most cases this value can be dropped to either 0 or 1 second.

  The new setting should be tested to make sure that it does not cause the rate controller to become unstable.

- System Gain setting

  The value affects the response time of the display to changes in pressure. The system gain changes two values (P gain and I gain) proportionally. The higher the number, the quicker the response.

  Any change to this value should be tested to avoid rate instability.

- P Gain setting

  This value is addressed after the System Gain is optimized.

GENERAL SPRAY OPERATION STRATEGIES

Spray performance is more consistent the less the flow control valve has to move in response to a change.

If the entry speed of a spray pass can be kept the same an the exit speed of the previous pass, the flow control valve does not need to move.

RESULT: Less under or over application.

- Determine a comfortable turning speed as you target exit and entry speed between passes. Typically this is 5 to 6 mph. Fairway speeds can be as high a 7 to 12 mph. So the strategy is to slow down to the comfortable turning speed as you exit a pass and maintain that turning speed as you start the next pass.

Smaller areas are more challenging than larger areas. So to minimize flow control changes, it is best to spray greens and tees at a constant speed around of 3 to 4 mph.

For systems equipped with boost - the display provides the option to turn the boost off if the operating duty cycle does not exceed 100%. This may be desirable when spraying greens or tees.

Boom section changes work the flow control valve. The largest challenge is going from a full boom to one nozzle

spraying and vis versa. To the experienced operator they may be able to manage these large swings in the number of sections spraying.

Dramatic speed changes work the flow control valve. Smooth speed changes are best to eliminate under or over applications. The Rate Sync™ feature of the system allows more aggressive speed changes.

INTERCHANGE THE COMPONENTS

SharpShooter™ with Rate Sync™ for turf system includes a number of multiple parts:

- Nozzle valves
- Valve drivers

When troubleshooting failed components, it can be helpful to replace the failed part with a working part at another location. If the problem follows the failed part to the new location, repair or replace the failed part.

If the problem does not follow the failed part, then the problem is likely elsewhere in the system and other troubleshooting means may be followed.

NOTE: *Use caution when interchanging failed components as in rare cases that the failed component may cause other components to fail at the new location.*

©2017 Capstan Ag Systems Inc. | SharpShooter™ with Rate Sync™ for Turf

TROUBLESHOOTING CHART

Use the this troubleshooting chart to locate and correct problems which most often occur with the system.

PROBLEM	CAUSE	CORRECTION
Under application of product.	Tips are too small.	Check the tip size, replace as necessary.
	Plugged tips.	Clean or replace tips.
	Plugged filter(s).	Clean or replace filter(s).
	Filter(s) not installed correctly.	Check all filters for correct installation.
	Plugged, kinked or collapsed hoses.	Check all hoses and replace as needed.
	Pump not turned on.	Turn on the pump.
	Outrunning system capability.	Slow down.
		Operate at optimum pressure.
	Incorrect rate settings.	Check and adjust rate settings.
	Incorrect calibration settings.	Check and adjust settings.
	Faulty radar.	Replace radar.
	Poor GPS satellite signal.	Verify that the GPS is working correctly.
	Faulty rate controller switch(es).	Locate the bad switch(es) and replace.
	Servo valve not working correctly.	Check the servo valve and replace as necessary.
	Boost not working.	Check for broken wires.
		Check the valve driver(s) and replace as necessary.
Over application	Tips are too large.	Check the tip size, replace as necessary.
	Worn tips.	Replace the tips as necessary.
	Speed too slow.	Increase speed.
	Incorrect rate settings.	Check and adjust rate settings.
	Incorrect calibration settings.	Check and adjust settings.
	Servo valve not working correctly.	Check the servo valve and replace as necessary.

PROBLEM	CAUSE	CORRECTION
Rate instability.	Low voltage to rate controller.	Test voltage and repair as needed
	Faulty flow meter.	Repair or replace flow meter if needed.
	Faulty pressure dampener on diaphragm pump(s).	Replace pressure dampener(s).
	Faulty speed sensor reading.	Check radar and replace if needed.
	Collapsed supply hose.	Replace supply hose.
	Inlet plugged.	Check and clean inlet if needed.
	Incorrect valve calibration settings.	Check and adjust settings (See the rate controller's manual).
	Incorrect display PID parameters.	Check the display PID parameters and adjust as needed.
	Faulty rate controller.	Replace rate controller.
	Low voltage to rate controller.	Test voltage and repair as needed.
Pressure instability.	Faulty rate controller.	Replace rate controller.
	Worn or sticky poppets.	Check and replace poppets as needed.
	Incorrect display PID parameters.	Check the display PID parameters and adjust as needed.
	Faulty pressure sensor.	Replace pressure sensor.
Single nozzle valve drips when shut off.	Plunger is lodged with debris.	Clean nozzle valve.
	Plunger is worn.	Replace plunger.
Single nozzle valve operates erratically.	Plunger is worn.	Replace plunger.
Single nozzle valve will not shut off.	Plunger is lodged with debris.	Clean nozzle valve
Section will not spray.	Blown fuse on valve driver.	Replace fuse on valve driver.
	Faulty valve driver.	Replace valve driver.
SSRS Display not functioning properly.	Low voltage at SSRS Display.	Perform system voltage checks.
Every other nozzle pulses.	Faulty valve driver.	Replace valve driver.
	Faulty harness.	Replace harness.
No pulse - **Auto Mode** Pulses - **Manual Mode**	Incorrect pressure sensor input and output settings.	Check and adjust settings.
No pulse - **Auto Mode** No pulse - **Manual Mode**	Faulty display.	Replace the display.

FUSES

Blown fuses are indicators of a short or overload condition. Do not replace a blown fuse with a larger fuse. Larger fuses may result in component failures.

©2017 Capstan Ag Systems Inc. | SharpShooter™ with Rate Sync™ for Turf

OEM TURF SHARPSHOOTER™ WITH RATE SYNC™ FUSE LOCATIONS			
FUSE LOCATION	**RATING**	**TYPE**	**COLOR**
Power Harness	5 A	ATO/ATC	Tan
Valve Drivers	10 A	ATO/ATC	Red

NOTE: *On OEM factory-installed units, the battery wire fuse may be located in a sprayer fuse box instead of in the wire itself.*

AFTER-MARKET TURF (OUTSIDE OF SHARPSHOOTER™ WITH RATE SYNC™ FUSE LOCATIONS			
FUSE LOCATION	**RATING**	**TYPE**	**COLOR**
Battery Power Cable	30 A	ATO/ATC	Green

NOTE: *On after-market-installed units, the battery power cable with 30 A fuse is required for after-market installations of advanced rate controllers and does not plug directly into the SharpShooter™ with Rate Sync™ system.*

COMPONENT TESTING

Nozzle Valves

Plugged nozzle valves can be classified into two categories:

- Plunger blockage
- Plunger stuck

Plunger blockage results when larger debris catches between the orifice and plunger seal. This is the smallest flow passage within the nozzle valve.

Stuck plungers result when smaller debris collects around the barrel of the plunger and binds the plunger in place. Symptoms of a blocked or stuck plunger are:

- Constant application
- Leaking when the nozzle is shut off
- No application

NOTE: *Pinched or split O-rings will also cause nozzles to drip when shutoff.*

NOTE: *Operating a plugged nozzle valve for extended periods of time may result in a nozzle valve coil failure. Clean any plugged nozzle valves immediately.*

NOTE: *Before removal or installation of the nozzle valves, make sure that the pressure has been released from the boom tubes.*

If plugged nozzles are a frequent problem in a particular boom section, inspect the boom filter screens for plugged or damaged screens. An 80-mesh screen is recommended to prevent nozzles from plugging. Check the mesh size of the strainers and replace strainers if they are too coarse.

Clean the Nozzle Valve(s)

FIGURE 27:

1. Unscrew the fly nut (1) to remove the nozzle valve assembly (2) from the nozzle body (3).

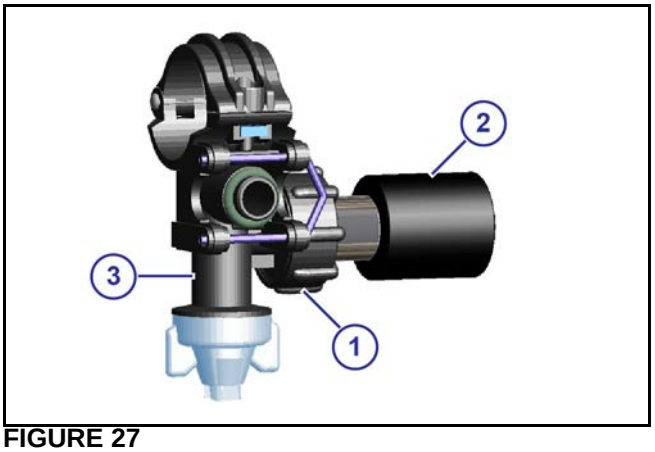

FIGURE 27

FIGURE 28:

2. Rotate the coil (1) counter clockwise to remove from the valve body (2).
3. Remove the plunger (3) from the coil.
4. Inspect the O-ring (4) on the coil.
5. Inspect the O-rings (5) on the valve body.
6. Wash the nozzle valve components to remove debris.
7. Inspect the plunger for wear or damage.
8. Replace the plunger if it is worn or damaged.

NOTE: *For correct part numbers, go to the serviceable parts list in this manual.*

9. Inspect the valve body. Make sure the orifice is not plugged with debris, worn or damaged. If orifice is worn or damaged replace valve body.
10. Remove the tip-cap (6), pre-orifice (7) and strainer (8).
11. Wash the nozzle body components to remove debris.
12. Replace any worn or damaged parts.

NOTE: *For correct part numbers, go to the serviceable parts list in this manual.*

IMPORTANT: *During installation, apply 40 in-lbs of torque to the coil when it threads into valve body to properly seat the O-ring.*

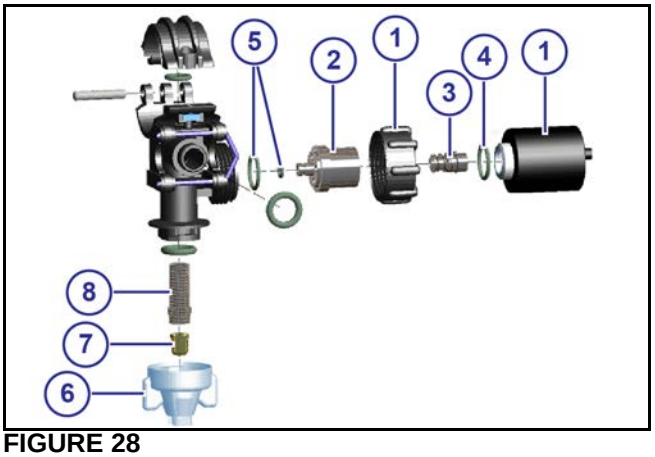

FIGURE 28

©2017 Capstan Ag Systems Inc. | SharpShooter™ with Rate Sync™ for Turf

Inspect the Plunger Seal

FIGURE 29: After extended use, the Teflon plunger seal will wear a groove (1) where the seal impacts the hard orifice seat. Replace plunger if worn or damaged.

As the groove deepens the pressure capacity of the valve will decrease, until the pressure capacity interferes with the operating pressure of the system.

The result is erratic pulsing, often described as "flickering". The N-Ject™ system will operate normally at lower pressures until replacement parts can be installed. High operating pressures and abrasive chemicals will accelerate the wear of the plunger seal material.

- Clean the connector terminals
- Replace coil

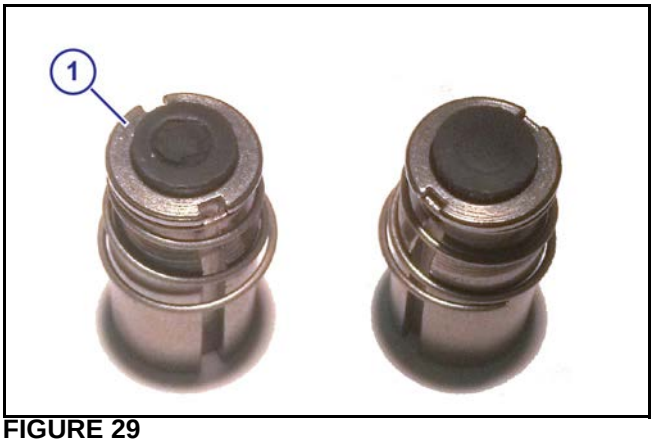

FIGURE 29

FIGURE 30: When replacing the plunger, make sure that you have the correct plunger:

Call out	Description	Part Number
1	High flow valve (four slots around the plunger seal)	716009-111
2	Standard flow valve (two slots around the plunger seal)	716009-113

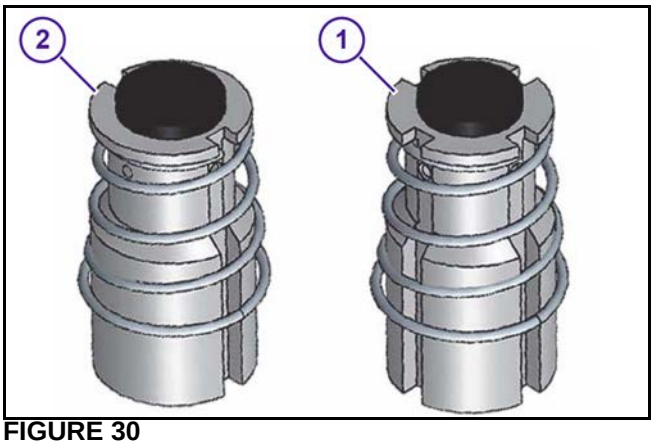

FIGURE 30

Coil Test

Coil failures are often the result of two factors:

Extended valve use with a plugged nozzle.

Extended use in corrosive environments.

NOTE: *CapstanAG recommends cleaning any plugged nozzle valves immediately.*

NOTE: *CapstanAG recommends rinsing the inside of the booms and washing the outside of the coils with clean water as often as practical.*

Use a voltmeter to measure the ohms of resistance across pins A and B on the nozzle valve connector.

- Resistance of 21 ohms to 23.5 ohms

If proper resistance is not found:

- Clean the connector terminals and retest
- Replace the coil

Check the Battery Voltage

FIGURE 31: Disconnect the display harness (8-pin Deutsch connector) on the back of the display.

- With the engine of the machine running, use a voltmeter to observe that there is a 13.5 VDC between pin 1 and pin 2.
- With the engine of the machine off, there is a 12.0 VDC between pin 1 and pin 2.

Make sure that the polarity is accurate by looking at the positive voltage when the red (positive) probe is connected to pin 1 and the black (negative) probe is connected to pin 2.

If there is no voltage present:

- Check the 30 A fuse in the sprayer fuse panel.
- Check the power hub battery connections.
- Check the condition of the battery.
- Check the condition of the alternator.

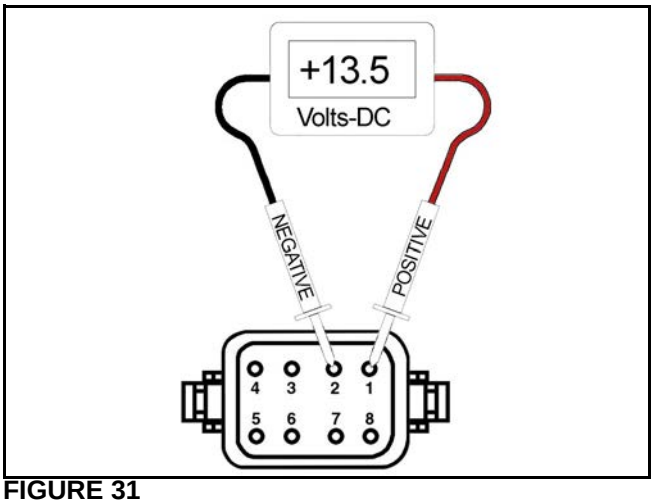

FIGURE 31

Check the System Load Capacity

FIGURE 32:

1. Disconnect the nozzle 2-pin connection that is located on the spray boom farthest from the battery.
2. Turn off the display.
3. Turn on all boom sections.
4. Start the engine of the machine.
5. Turn on all of the electrical loads, including the air conditioning, foam marker monitors, etc.
6. Use a voltmeter to check the voltage between pin A and pin B.

The SharpShooter™ with Rate Sync™ nozzle valves operate best at 12 VDC or higher. Using less than 12 VDC will result in reduced pressure capacity. This will often result in erratic nozzle pulsing, sometimes described as flickering.

Also, check the nozzle valves for worn plunger seals.

If low voltage is observed:

- Check and clean the battery terminals.
- Check the condition of the battery.
- Check the condition of the alternator.
- Check the condition of the connections.

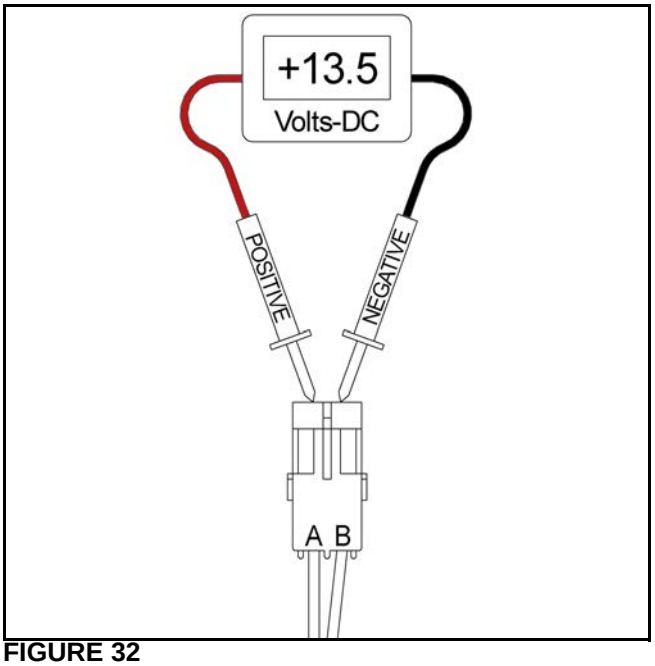

FIGURE 32

©2017 Capstan Ag Systems Inc. | SharpShooter™ with Rate Sync™ for Turf

Check The Valve Driver Voltage

FIGURE 33: Disconnect the valve driver from the power hub harness by disconnecting the 8-pin Deutsch connector. The connector is generally located at each boom section.

Use a voltmeter to make sure that there is 13.5 VDC between pins 1 and 2 with the engine running or 12.0 VDC without the engine running.

Make sure that the polarity is accurate by looking at the positive voltage when the red (positive) probe is connected to pin 1 and the black (negative) probe is connected to pin 2.

If there is no voltage present:

- Check the 30 A fuse in the sprayer fuse panel.
- Check the power hub battery connections.
- Check the condition of the battery.
- Check the power hub valve driver extension harness connection.

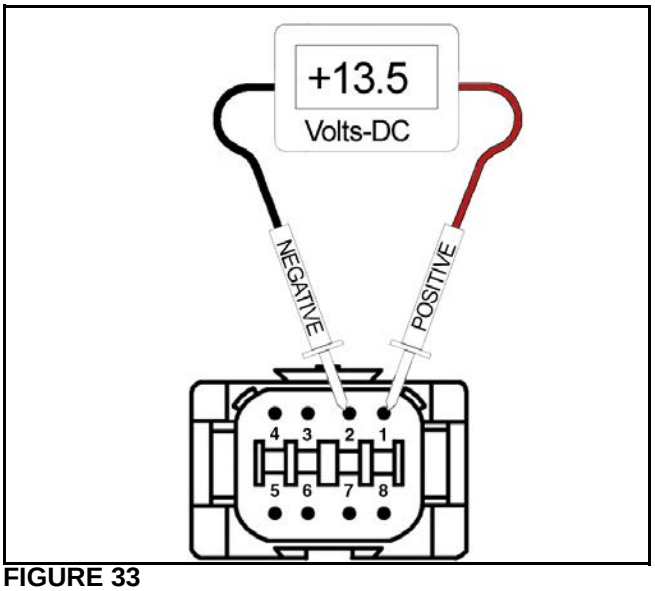

FIGURE 33

Check the Pulse Circuit (Display Output)

FIGURE 34:

1. Disconnect the valve driver 8-pin Deutsch connector from the extension harness that connects to the power hub.
2. Put the display in **Manual Mode**.
3. Use the **INCREASE** or **DECREASE** buttons to set the duty cycle to 70%.
4. Use a voltmeter to make sure that there is 4.05 VDC between pins 2 and 4.

   This tests the even pulse.

   Most voltmeters measure signal as 12 VDC 10 Hz square wave which is a low voltage. In addition, the signal is inverted, so the 70% duty cycle selected on the display will actually be a 30% duty signal at the valve driver. Measurements may vary depending on the voltmeter used.
5. Use a voltmeter to make sure that there is 4.05 VDC between pins 2 and 5.

   This tests the odd pulse.

If accurate voltage is not found:

- Check the valve driver extension connections.
- Check the display extension connections.
- Check the display serial diagnostics.

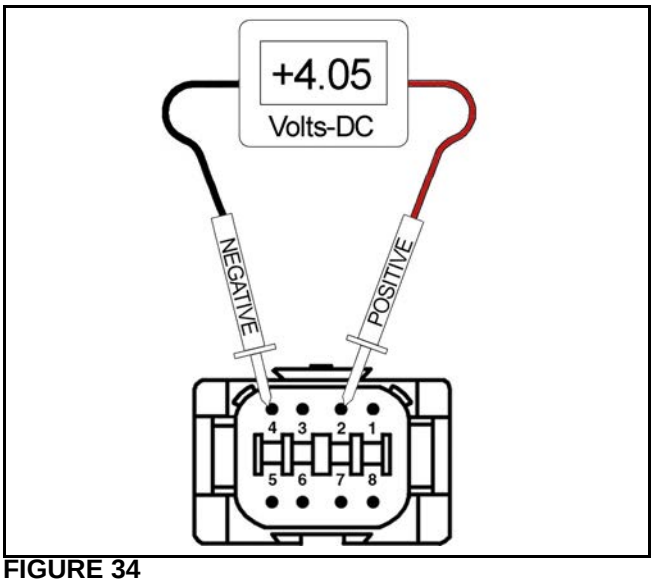

FIGURE 34

Check the Valve Driver Output

FIGURE 35:

1. Disconnect the desired nozzle valve 2-pin connector from the nozzle harness connector located on the spray boom.
2. Put the display in **Manual Mode**.
3. Use the **INCREASE** or **DECREASE** buttons to set the duty cycle to 70%.
4. Turn on the boom section that corresponds with the nozzle harness connector being tested.
5. Use a voltmeter to make sure that there is 9.5 VDC between pins A and B.

   The color of the wire on pin B can be white or green.

   Most voltmeters measure signal as 12 VDC 10 Hz square wave which is a low voltage. Measurements may vary depending on the voltmeter used.
6. Use a voltmeter to make sure that there is 9.5 VDC between pins A and B on the nozzle harness connector next to the one being tested.

   The color of the wire on pin B should be different from the one being tested.

If accurate voltage is not found:

- Check the valve driver extension connections.
- Check the display extension connections.
- Check the display serial diagnostics.

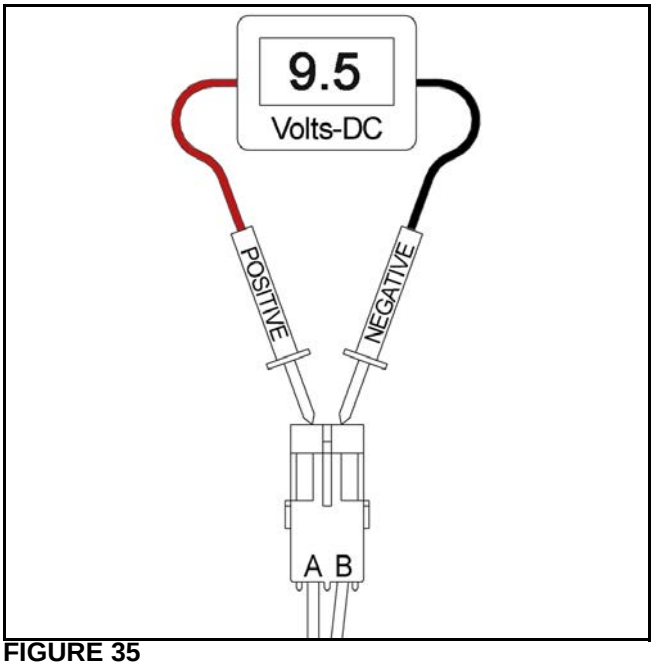

FIGURE 35

Check the Valve Driver Input

FIGURE 36:

1. Disconnect the 8-pin Deutsch connector on the display harness from the display.
2. Start the machine engine.
3. Turn on the pump and boom.
4. Use the rate controller to get to 40 psi on the pressure gauge.

   The boom should now be spraying.
5. Tap a jumper wire, several times per second, between pins 1 and 4 on the power hub harness 8-pin Deutsch connector.
6. Make sure that every even nozzle valve turns off as the jumper wire connects and turns on as the jumper wire disconnects.
7. Make sure that the nozzles are pulsing on each boom section.

If the boom sprays but does not pulse when the jumper wire is tapped:

- Check the power hub display extension connection.
- Check the valve driver extension connections.

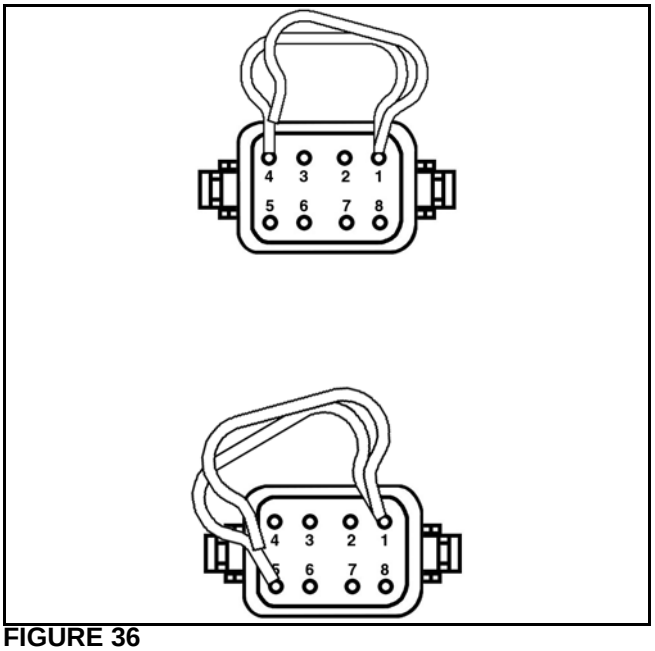

FIGURE 36

©2017 Capstan Ag Systems Inc. | SharpShooter™ with Rate Sync™ for Turf

Test the Pressure Sensor Signal

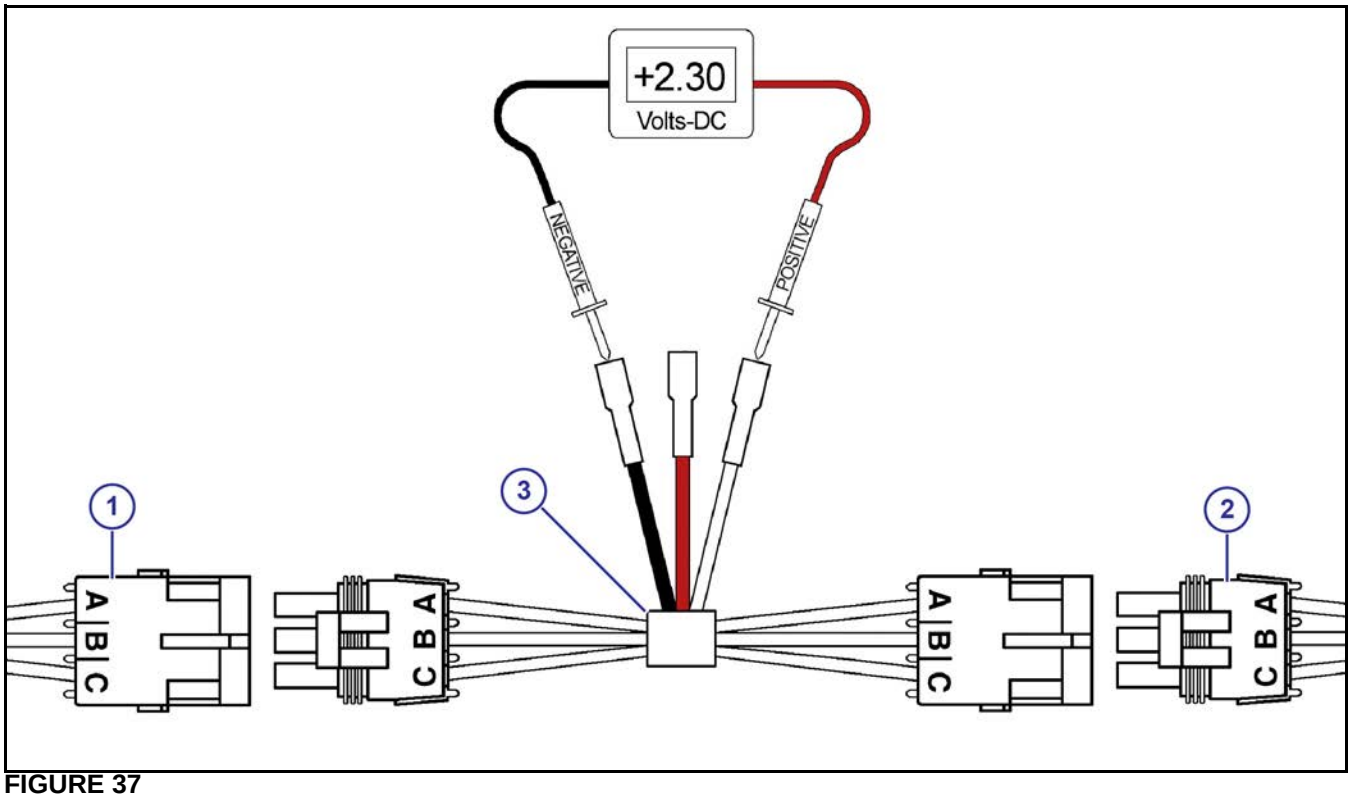

FIGURE 37

FIGURE 37:

Disconnect the pressure sensor (1) from the pressure sensor harness (2). Connect one end of the pressure sensor breakout harness diagnostic tool (3) into the pressure sensor shroud connector. Connect the other end into the pressure sensor harness tower connector

With the engine running and the system turned on, use the rate controller to establish 50 psi on the pressure gauge.

Use a voltmeter to observe that there is 2.30 VDC between the black and white wire on the pressure sensor breakout harness.

Using the rate controller, adjust the pressure to 100 psi. The voltmeter should read 5.0 VDC.

If accurate voltage is not present:

- Verify the accuracy of the pressure gauge on the sprayer.
- Check for power to the pressure sensor.
- Use the serial diagnostics to check the pressure sensor calibration.
- Replace the pressure sensor.

Check the Power to the Pressure Sensor Input

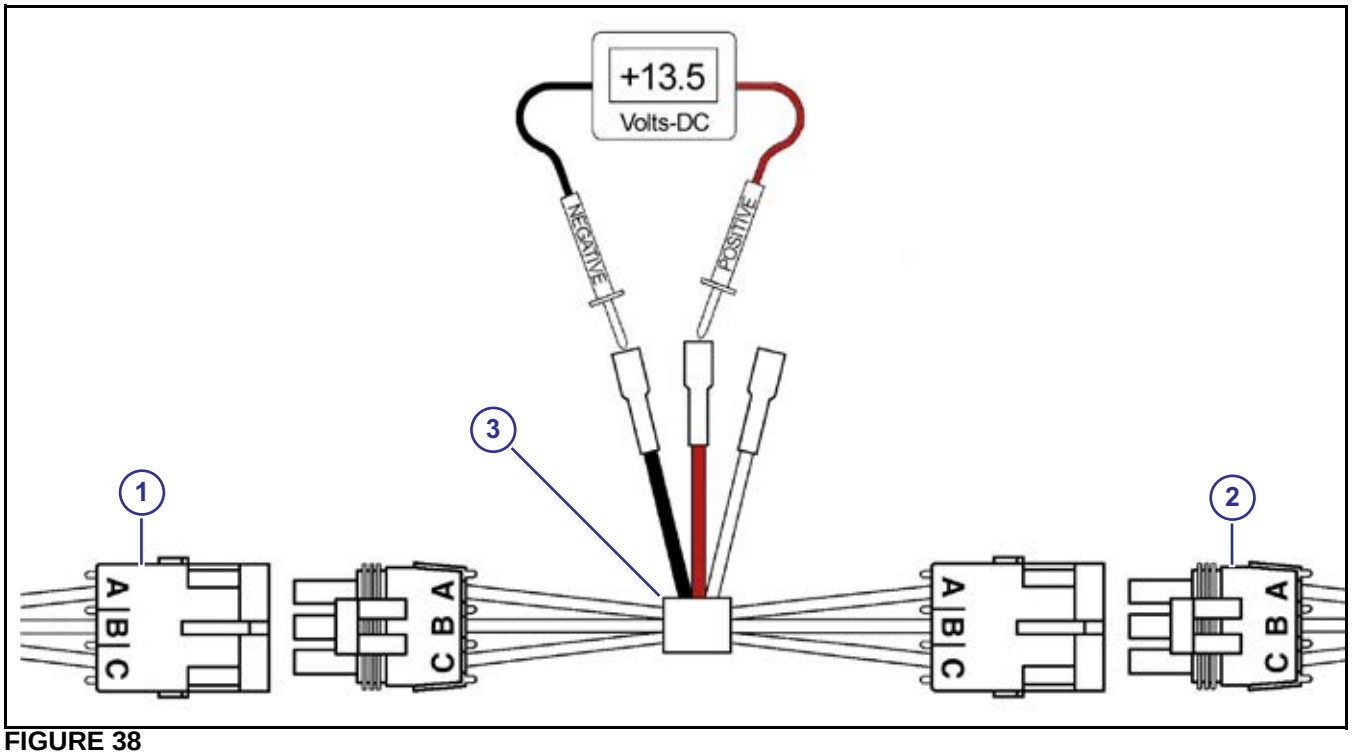

FIGURE 38

FIGURE 38:

Disconnect the pressure sensor (1) from the pressure sensor harness (2). Connect one end of the pressure sensor breakout harness diagnostic tool (3) into the pressure sensor shroud connector. Connect the other end into the pressure sensor harness tower connector.

Use a voltmeter to observe that there is13.5 VDC between the red and black wire on the pressure sensor\ breakout harness with the engine running, or 12.0 VDC without the engine running.

Be sure the polarity is accurate by observing that there is positive voltage when the red (positive) probe is connected to the red pressure sensor breakout harness wire and the black (negative) probe is connected to the black pressure sensor breakout harness wire.

If no voltage is present:

- Check the fuse located at the battery.
- Check the battery connections.
- Check the condition of the battery.
- Check the condition of the alternator.

©2017 Capstan Ag Systems Inc. | SharpShooter™ with Rate Sync™ for Turf

Test the Boom Section Run/Hold Signal

FIGURE 39:

1. Disconnect the 8-pin Deutsch connector on the display harness from the display.
2. With water in the product, start the machine engine.
3. Turn on the pump with the boom off.
4. Put the rate controller is manual mode (now running speed and pressure).
5. Set a test speed.
6. Use INC/DEC switch to get 40 psi on the pressure gauge.

   The boom should not be spraying.
7. Use a voltmeter to make that the rate controller is sending 13.5 VDC run/hold signal through the shutoff adapter and power hub to the display while the engine is running.

   With the engine off, the rate controller is sending 12.0 VDC run/hold signal through the shutoff adapter and power hub to the display.
8. Turn on boom section 1.
9. Make sure that the nozzle valve opens and spray is fully open.
10. Use a voltmeter to check the signal between pins 2 and 6.
11. Turn off boom section 1.
12. Make sure that the spray and voltage stop.
13. Do this procedure for all other boom sections.

If there is no spray or voltage:

- Check the boom shutoff adapter connections.
- Check the run/hold signal from the rate controller harness.
- Check for continuity in the cable, then check the rate controller section switches.
- Replace the rate controller.

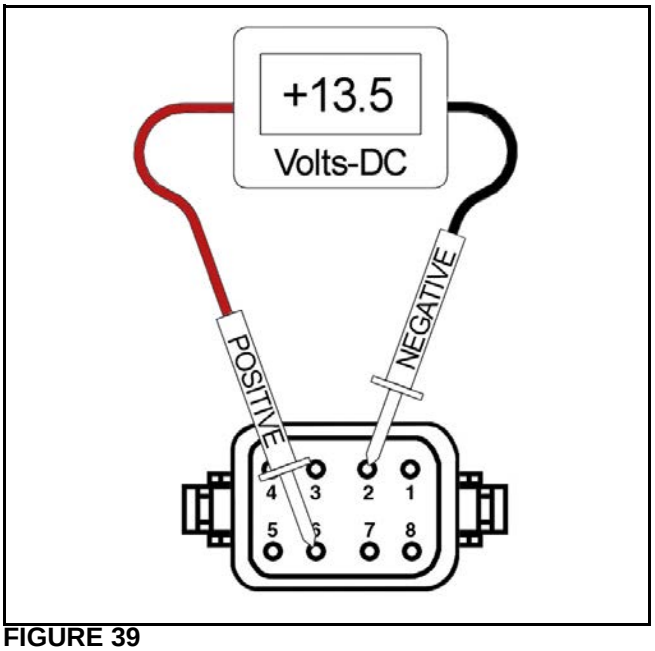

FIGURE 39

Check the Boom Section Shutoff Signal

FIGURE 40:

1. Disconnect the 8-pin Deutsch connector on the display harness from the display.
2. Turn on the rate controller master switch and all the section switches.
3. Use a voltmeter to check the signal between pins 2 and 3.

   The rate controller should be sending a 13.5 VDC (engine running) or a 12.0 VDC (engine off) signal through the Shutoff Adapter and then the Power Hub.
4. For systems with Boost, check each power hub harness to the non-boost and the boost valve drivers.
5. Turn off the boom shutoff switch to make sure that the voltage disappears.

If no spray or voltage is observed trace the voltage signal from the rate controller harness (each section wire) through the boom shutoff adapter to the power hub.

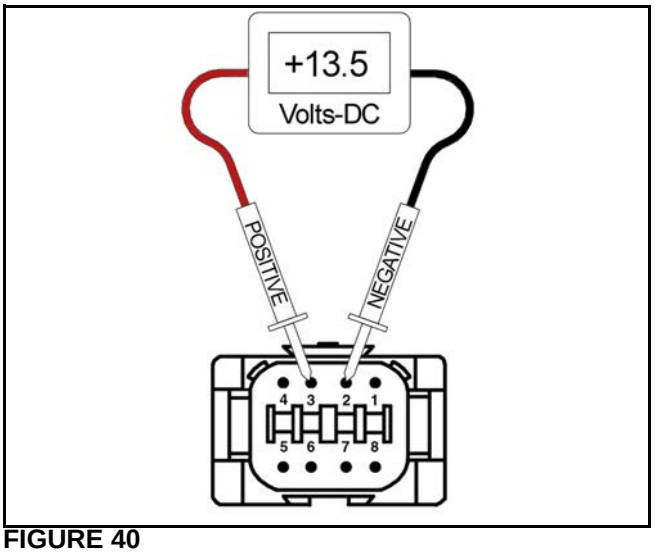

FIGURE 40

©2017 Capstan Ag Systems Inc. | SharpShooter™ with Rate Sync™ for Turf

TECHNICAL BULLETIN - JULY 11, 2001 (REVISED MAY 12, 2017)

Spray Skips from Poor Pulse Blending

Over the years, CapstanAG field engineers have received many questions about Blended Pulse™ spraying and its potential for causing skips in the field. In rare instances, skipping has been documented in the field. This technical bulletin is intended to explain pulse blending, and the techniques used to provide optimum spray coverage and to prevent skipping.

What is Blended Pulse™ spraying? Each nozzle in a Blended Pulse™ spray system emits 19 spray pulses per second. Adjacent nozzles have alternate timing. The alternating pulses, the overlapping spray patterns, and the natural dispersing of droplets, blend together to provide consistent coverage of the target.

What makes the pulses blend? Below is an illustration of what a blended pulse spray pattern might look like if it were sprayed upon a flat surface. This spray pattern is similar to a #8 size flat fan spray tip (with a 110° fan angle) that is spraying 5 GPA at 15 mph with a 50 psi boom pressure. The nozzles are 20 in apart. Each tip is rotated 12.5° to prevent pattern interference between nozzles. The minimum boom height is 21 in above the spray target.

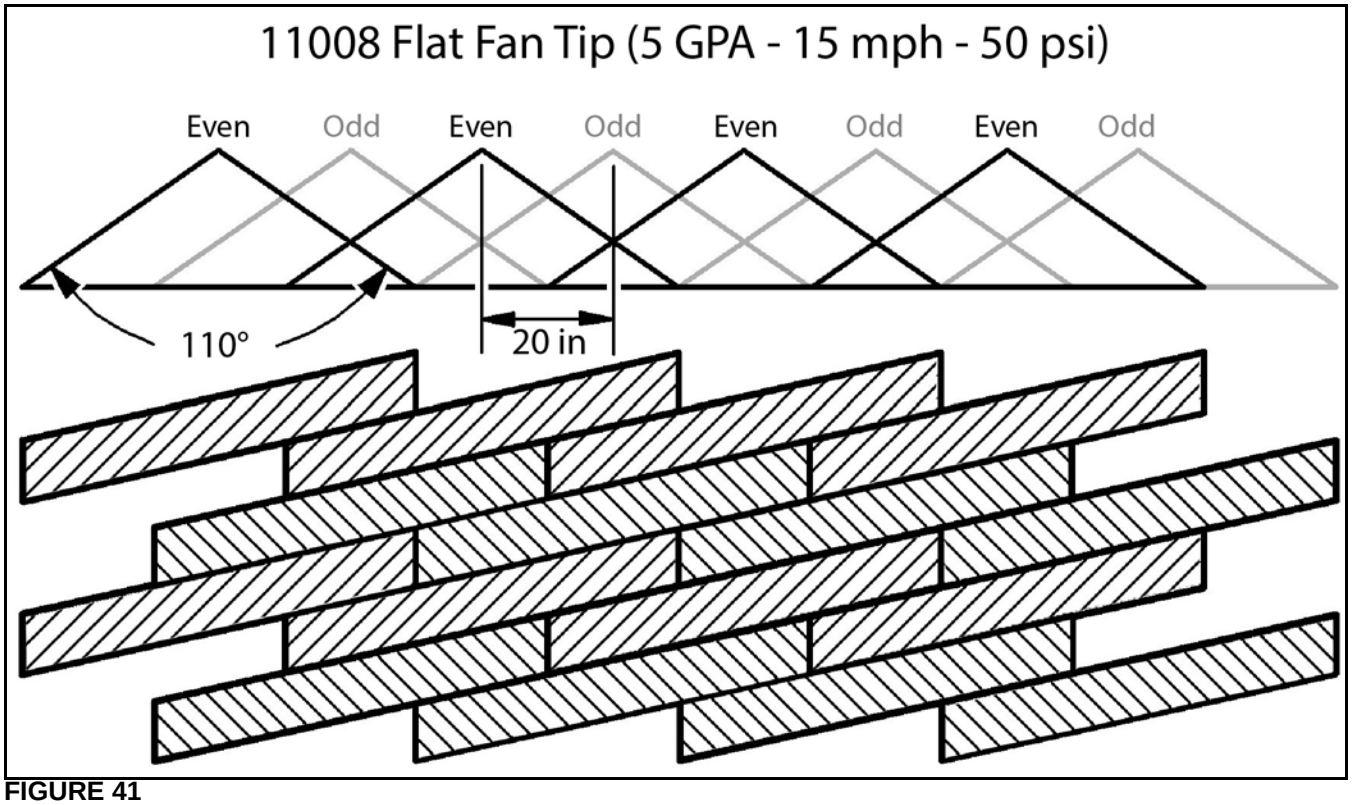

FIGURE 41

FIGURE 41: In this example, each nozzle sprays 1/3 of the time, but adjacent nozzles alternate and overlap to fill in areas between the nozzles. As the sprayer increases speed, rate, or boom height, the pulses become wider, this provides additional overlap, better pulse blending, and increased spray coverage.

As the sprayer decreases speed or rate, skips may begin to appear. For this example, a smaller tip size would be recommended if slower speeds are desired.

Pattern width and natural droplet dispersion are not shown in the diagram. These factors help to smooth out the pulses and fill in skips. The amount of droplet dispersion depends upon the style of tip being used. For example, low-drift tips typically emit large droplets and provide minimal droplet dispersion.

What causes skipping? Below is the same illustration from the previous page except that 80° fan angle tips are used rather than 110° tips. In this case, the 21 in boom height does not provide adequate nozzle overlap and skips can be seen. Tips emitting small droplets, with plenty of droplet dispersion, will fill in large skips. Large droplet tips may not fill in the skips, and this may result in poor coverage. The skips appear as diagonal lines in the direction of travel. The angle of the diagonal depends upon the speed of the sprayer.

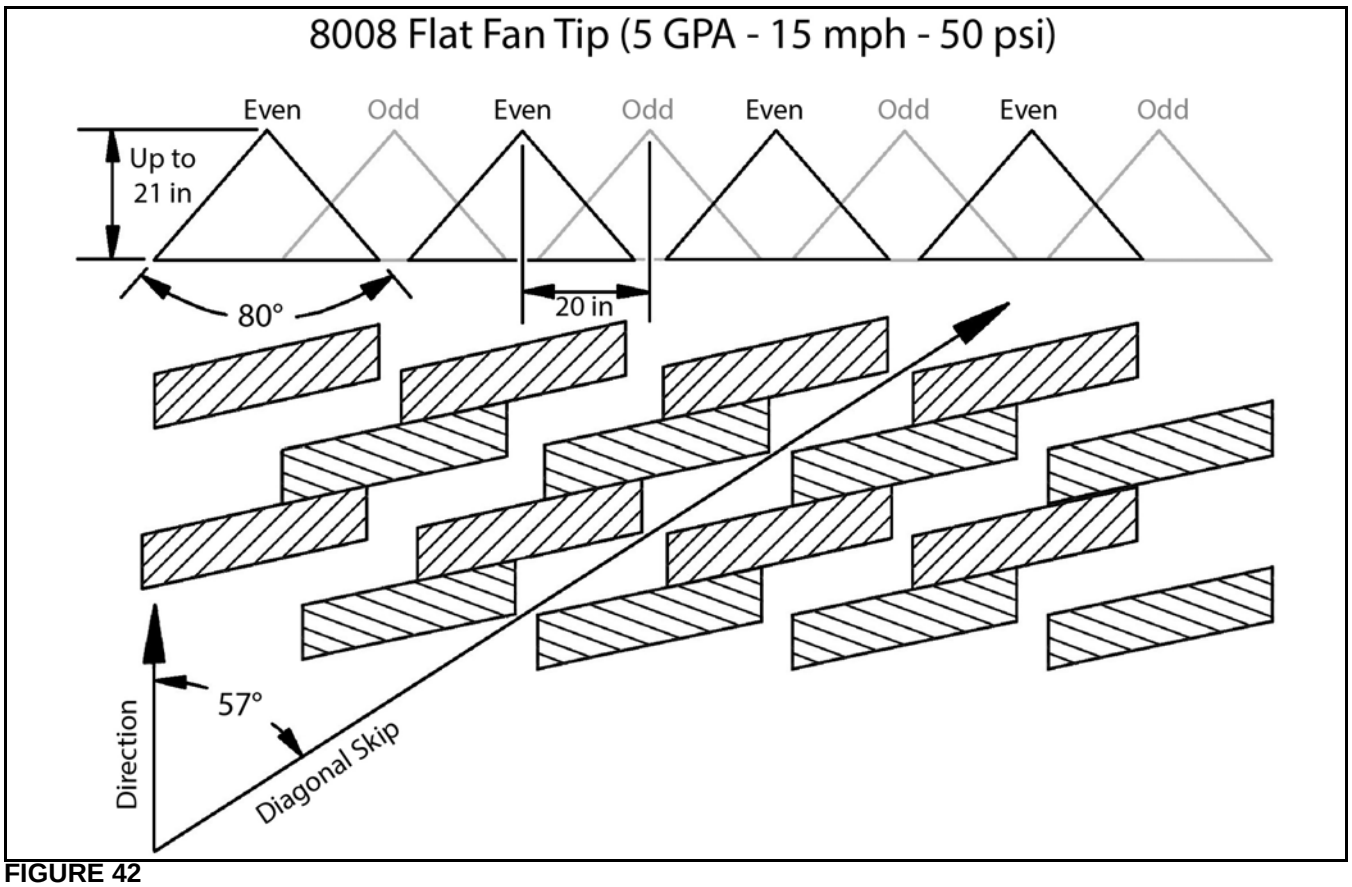

FIGURE 42

FIGURE 42: To Prevent Skipping:

1. Use wide-angle spray tips and appropriate boom heights to provide 150% nozzle overlap.
   - For 80° tips, use 36 in or greater boom height.
   - For 110° tips, use 24 in or greater boom height.
   - Use pressures which fully develop the intended fan angle.
2. Avoid pulse duty cycles below 33%.
   - Use appropriately sized spray tips for the desired speed, rate, and pressure ranges.
   - Avoid speeds in the lower 1/3 of the speed range.
   - Avoid rates in the lower 1/3 of the rate range.
3. Use additional caution when using drift control tips or drift control additives which increase droplet size and reduce droplet dispersion. Follow the boom height, duty cycle, and tip selection recommendations to make sure that there is adequate spray coverage.
4. Always read and follow chemical label instructions. Agronomic and environmental factors significantly affect efficiency of the chemicals, and will magnify the adverse effects of poor coverage. Follow boom height, duty cycle, and tip selection recommendations for hot and dry field conditions, large/mature weed pressures, etc.
5. Always apply Blended Pulse™ broadcast sprays using a 19 Hz or greater pulse frequency. The CapstanAG master module and display allow the pulse frequency to be reduced for non-sprayer applications, when uniform coverage is not required.

©2017 Capstan Ag Systems Inc. | SharpShooter™ with Rate Sync™ for Turf

WARRANTY

LIMITED WARRANTY

Rev Date: 7/15/2014

A. What does the Limited Warranty cover?

The ultimate purchaser/user (“you”), by acceptance of seller Capstan Ag Systems, Inc.’s, (“our,” “we,” or “us”) product, assume all risk and liability of the consequences of any use or misuse by you, your employees, or others.

All replacement components furnished under this warranty, but shipped before the failed component is returned for evaluation, will be invoiced in the usual manner and warranty adjustments will be made after the component claimed to be defective has been returned to and inspected and deemed defective by us at our factory.

Upon determining that a component has failed under warranty, the repaired component or replacement component, furnished under this warranty, will be shipped at our expense, to your location. We will credit you an amount equal to the incoming freight you paid. We shall not be responsible for installation costs. (You shall be responsible for all customs and brokerage fees for all international transactions.)

If the component does not prove to be defective, you shall be liable for all freight, inspection and handling costs. In no event will any claim for labor or incidental or consequential damages be allowed for removing or replacing a defective product. Warranty will be denied on any component which has been subject to misuse, abuse, accidents, or alterations, or to improper or negligent use, maintenance, storage or transportation and handling.

Our liability under this warranty, or for any loss or damage to the components whether the claim is based on contract or negligence, shall not, in any case, exceed the purchase price of the components and upon the expiration of the warranty period all such liability shall terminate. The foregoing shall constitute your exclusive remedy and our exclusive liability.

The terms of this warranty do not in any way extend to any product which was not manufactured by us or one of our affiliates.

While necessary maintenance or repairs on your Capstan Ag Systems, Inc. product can be performed by any company, we recommend that you use only authorized Capstan Ag Systems, Inc. dealers. Improper or incorrectly performed maintenance or repair voids this warranty.

The foregoing warranty is exclusive and is in lieu of all other warranties expressed or implied. We shall not be liable for any incidental or consequential damages resulting from any breach of warranty.

Your exclusive remedy for breach of warranty shall be repair or replacement of defective component(s): Provided, if the component(s) are incapable of being repaired or replaced, your exclusive remedy shall be credit issued, but such credit shall not exceed the purchase price of the components.

On any claim of any kind, including negligence, our liability for any loss or damage arising out of, or from the design, manufacture, sale, delivery, resale, installation, technical direction of installation, inspection, repair, operation of use of any products shall in no case exceed the purchase price allocable to the components.

In no event, whether as a result of breach of contract or warranty or alleged negligence, shall we be liable for incidental or consequential damages, including, but not limited to: personal injury, loss of profits or revenue, loss of use of equipment or any associated equipment, cost of capital, cost of substitute equipment, facilities or services, downtime costs, environmental damage, crop losses, or claims of customers of you for such damages.

B. What is the period of coverage?

We warrant to you, that our products are free from defects in material and workmanship in normal use and service for a period of one year from date of purchase.

C. How do you get service?

Our obligation under this warranty shall be limited to the repairing or replacing at our option, the component which our inspection discloses to be defective, free of charge, return freight paid by us, provided you: (i) Notify us of defect within thirty (30) days of failure; (ii) Return the defective component to us, freight prepaid; (iii) Complete the Owner Registration Form and returned it to us; and (iv) Establish that the product has been properly installed, maintained and operated in accordance with our instructions or instructions contained in our operations or maintenance manuals and within the limits of normal usage.

Any claim for breach of our warranty must be in writing addressed to us and must set forth the alleged defect in sufficient detail to permit its easy identification by us. All breach of warranty claims must be made within thirty (30) days after expiration of the warranty period which is applicable to the defective product. Any breach of warranty claim not timely made will not be honored by us and will be of no force and effect.Any component that needs to be repaired or evaluated for warranty has to be authorized before return. Contact the factory (785-232-4477) to get a Return Materials Authorization (RMA #). This helps to track the part coming into the factory for repair or replacement.

Before returning any component to the factory, clean the component as well as possible to remove any dirt or chemical residue. Components received at the factory that are not clean, will be returned and warranty denied.

After receiving your RMA #, package the part, making sure to include the RMA #, your name, customer's name, your address and phone number and description of problems or failure. Then ship to:

Capstan Ag Systems, Inc.
Attn: Warranty/Repair
4225 SW Kirklawn Ave.
Topeka, KS 66609

Phone: (785) 232-4477
Fax: (785) 232-7799
Hours: 8 a.m. - 4:30 pm CST

D. How does state law relate to this Limited Warranty?

Some states do not allow limitations on how long an implied warranty lasts, so the above limitation may not apply to you.

Some states do not allow the exclusion or limitation of incidental or consequential damages, so the above limitation or exclusion may not apply to you.

This warranty gives you specific legal rights, and you may also have other rights which vary from state to state.

©2014 Capstan Ag Systems, Inc., All Rights R

SCHEMATICS

GENERAL SYSTEM LAYOUT

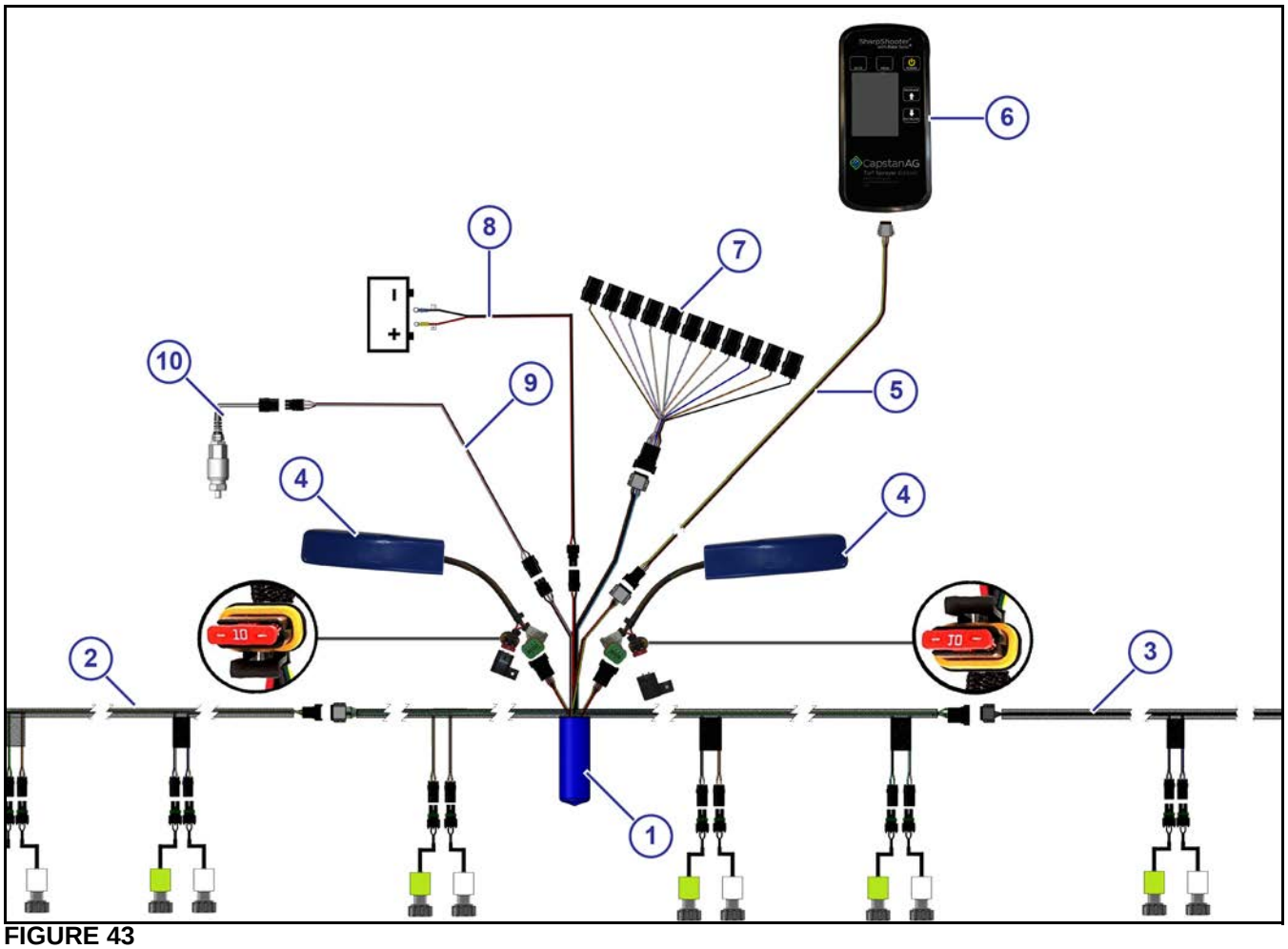

FIGURE 43
FIGURE 43: General layout of the system.

(1) Power Hub
(2) Left Boom Harness
(3) Right Boom Harness
(4) Valve Driver Module
(5) Display Extension Harness
(6) Display
(7) Boom Shutoff Adapter
(8) Power Harness
(9) Pressure Sensor Extension Harness
(10) Pressure Sensor - 100 psi

POWER HUBS

9-Nozzle Power Hub - 15 ft (P/N - 118600-250) - Boost

This power hub is used for these kits:

- 118600-230
- 118600-225
- 118600-208
- 118600-202

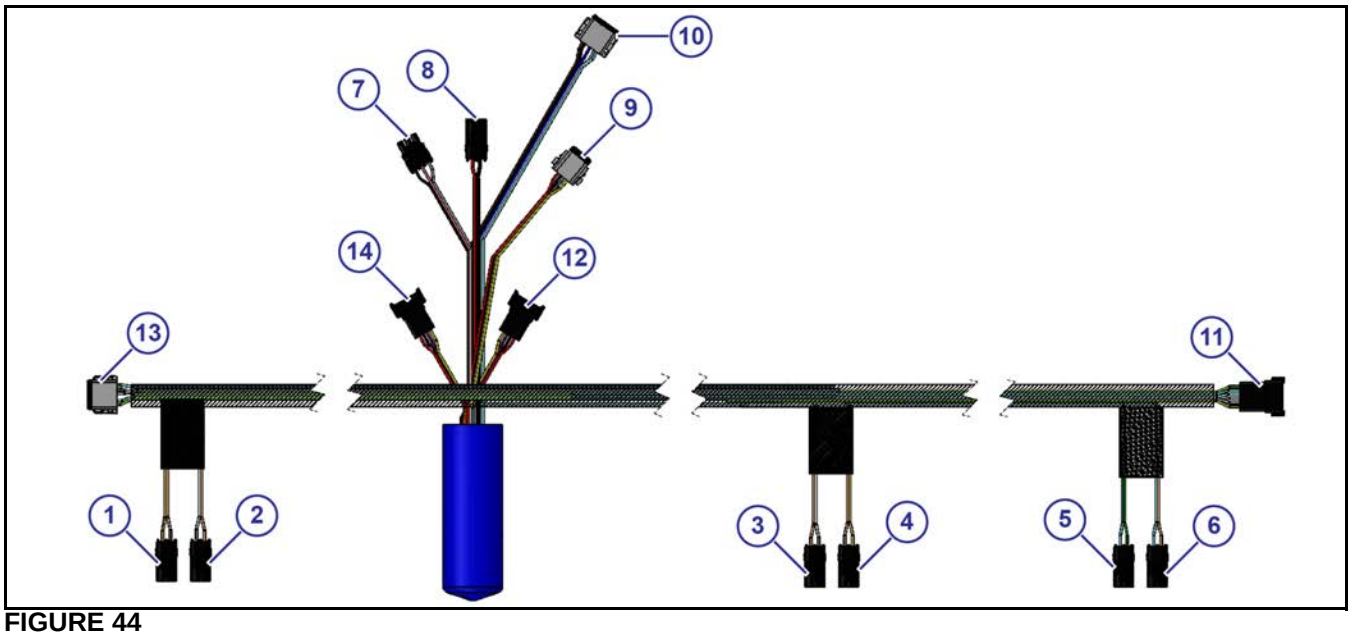

FIGURE 44

FIGURE 44:

(1) Nozzle 4 Connector- Pulse

(2) Nozzle 4 Connector- Boost

(3) Nozzle 5 Connector- Pulse

(4) Nozzle 5 Connector- Boost

(5) Nozzle 6 Connector- Pulse

(6) Nozzle 6 Connector- Boost

(7) Pressure Sensor Connector

(8) Connector to Power Harness (Battery)

(9) Display Extension Harness

PINOUT	COLOR		PINOUT	COLOR
1	Red		5	Green/White
2	Black		6	Violet
3	Gray		7	Green/Orange
4	Yellow		8	White/Orange

(10) Boom Shutoff Adapter Connector

(11) Connector to the right boom harness

(12) Valve Driver (Boost) Connector

PINOUT	COLOR		PINOUT	COLOR
1	Red		5	Green/White
2	Black		6	Violet
3	Orange		7	Green/Orange
4	Yellow		8	White/Orange

(13) Connector to the left boom harness

(14) Valve Driver (Pulse) Connector

PINOUT	COLOR		PINOUT	COLOR
1	Red		5	Green/White
2	Black		6	Violet
3	Plug		7	Green
4	Yellow		8	Green/Orange

©2017 Capstan Ag Systems Inc. | SharpShooter™ with Rate Sync™ for Turf

11-Nozzle Power Hub - 18 ft (P/N - 118600-253) - Boost

This power hub is used for these kits:

- 118600-226
- 118600-206
- 118600-200

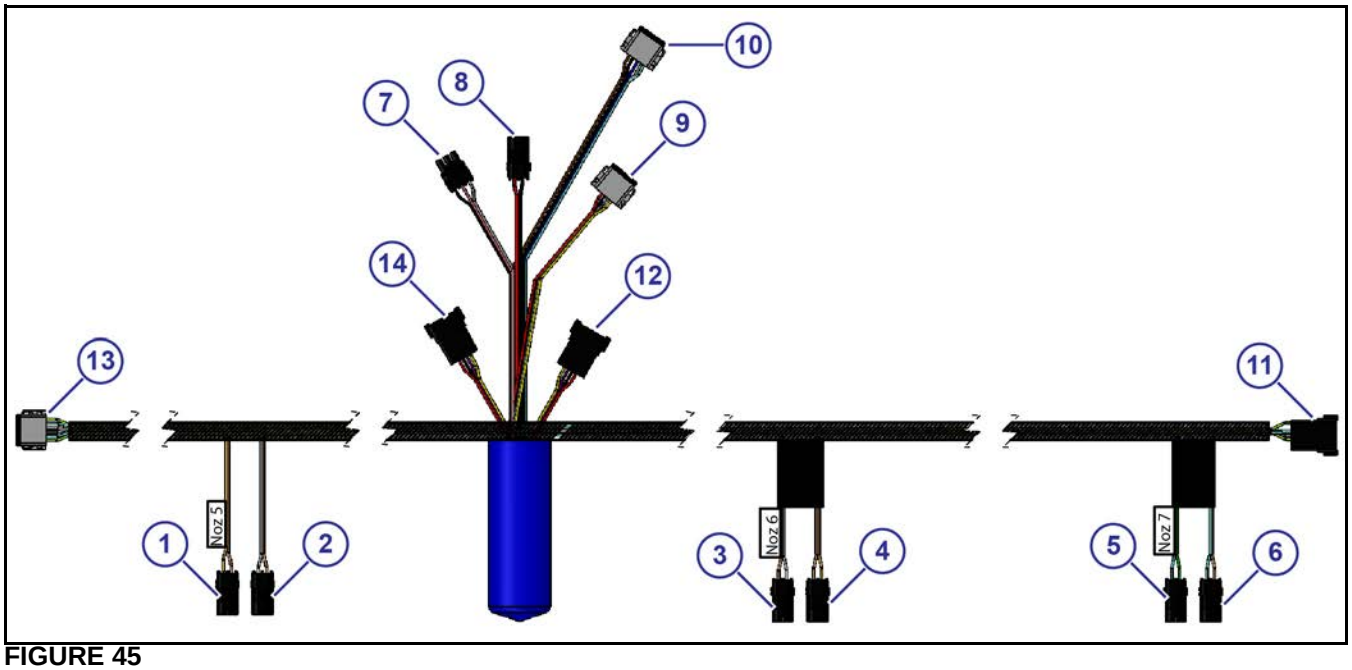

FIGURE 45
FIGURE 45:

(1) Nozzle 5 Connector- Pulse

(2) Nozzle 5 Connector- Boost

(3) Nozzle 6 Connector- Pulse

(4) Nozzle 6 Connector- Boost

(5) Nozzle 7 Connector- Pulse

(6) Nozzle 7 Connector- Boost

(7) Pressure Sensor Connector

(8) Connector to Power Harness (Battery)

(9) Display Extension Harness

PINOUT	COLOR		PINOUT	COLOR
1	Red		5	Green/White
2	Black		6	Violet
3	Gray		7	Red/White
4	Yellow		8	Orange

(10) Boom Shutoff Adapter Connector

(11) Connector to the right boom harness

(12) Valve Driver (Boost) Connector

PINOUT	COLOR		PINOUT	COLOR
1	Red		5	Green/White
2	Black		6	Violet
3	Orange		7	Green/Orange
4	Yellow		8	White/Orange

(13) Connector to the left boom harness

(14) Valve Driver (Pulse) Connector

PINOUT	COLOR		PINOUT	COLOR
1	Red		5	Green/White
2	Black		6	Violet
3	Plug		7	Green
4	Yellow		8	White

12-Nozzle Power Hub - 20 ft (P/N - 118600-256) - Boost

This power hub is used for these kits:

- 118600-228
- 118600-207
- 118600-201

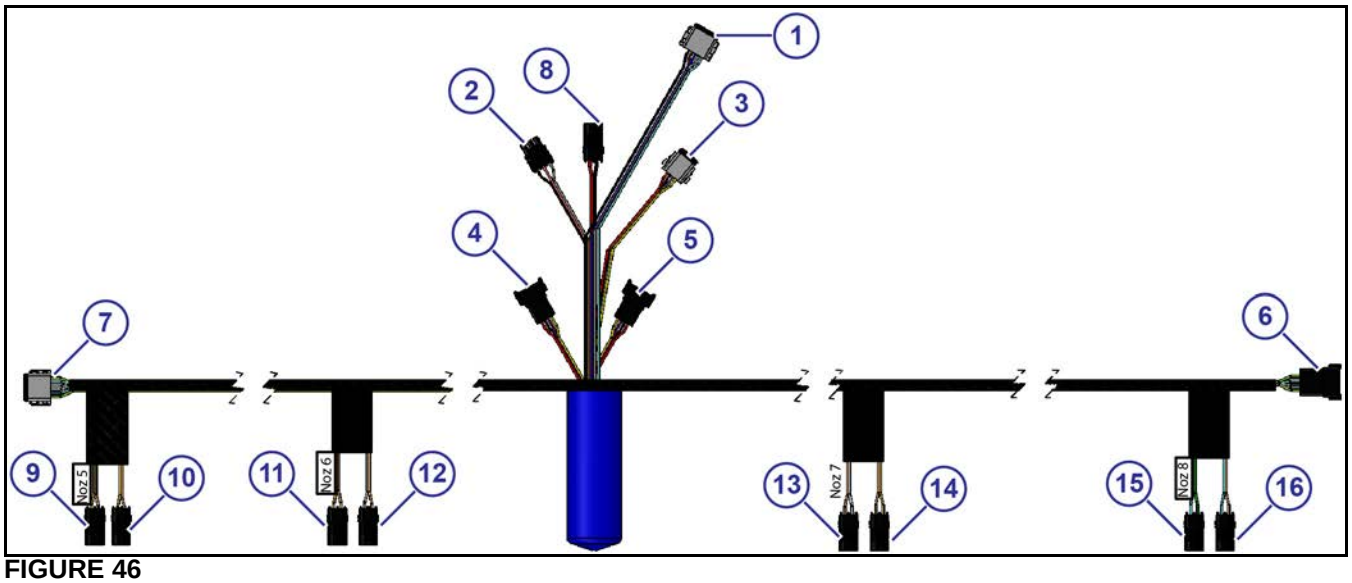

FIGURE 46
FIGURE 46:

(1) Boom Shutoff Adapter Connector

(2) Pressure Sensor Connector

(3) Display Extension Harness

PINOUT	COLOR		PINOUT	COLOR
1	Red		5	Green/White
2	Black		6	Violet
3	Gray		7	Red/White
4	Yellow		8	Orange

(4) Valve Driver (Pulse) Connector

PINOUT	COLOR		PINOUT	COLOR
1	Red		5	Green/White
2	Black		6	Violet
3	Plug		7	Green
4	Yellow		8	White

(5) Valve Driver (Boost) Connector

PINOUT	COLOR		PINOUT	COLOR
1	Red		5	Green/White
2	Black		6	Violet
3	Orange		7	Green/Orange
4	Yellow		8	White/Orange

(6) Connector to the right boom harness

(7) Connector to the left boom harness

(8) Connector to Power Harness (Battery)

(9) Nozzle 5 - Pulse

(10) Nozzle 5 Connector - Boost

(11) Nozzle 6 Connector - Pulse

(12) Nozzle 6 - Boost

(13) Nozzle 7 Connector - Pulse

(14) Nozzle 7 Connector - Boost

(15) Nozzle 8 - Pulse

(16) Nozzle 8 Connector - Boost

©2017 Capstan Ag Systems Inc. | SharpShooter™ with Rate Sync™ for Turf

9 Nozzle Power Hub - 15 ft (P/N - 118600-260) - No Boost

This power hub is used for these kits:

- 118600-240
- 118600-245
- 118600-235

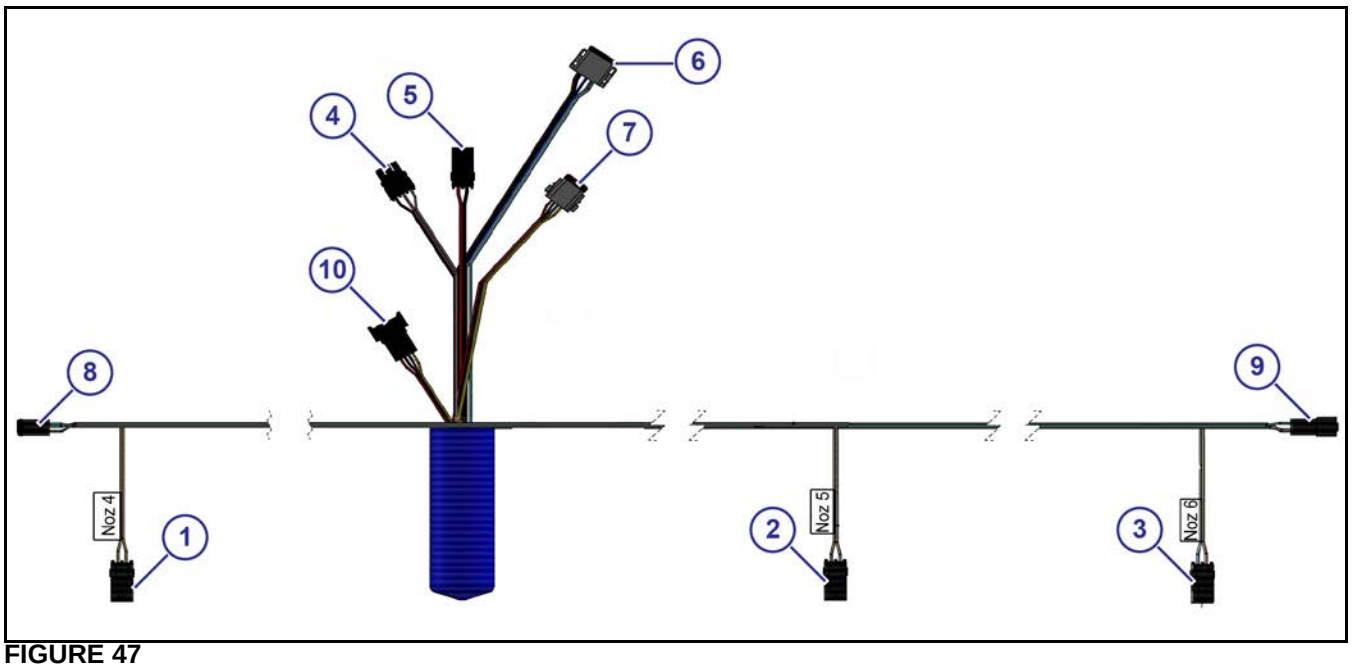

FIGURE 47

FIGURE 47:

(1) Nozzle 4 Connector

(2) Nozzle 5 Connector

(3) Nozzle 6 Connector

(4) Pressure Sensor Connector

(5) Connector to Power Harness (Battery)

(6) Boom Shutoff Adapter Connector

(7) Display Extension Harness

PINOUT	COLOR		PINOUT	COLOR
1	Red		5	Green/White
2	Black		6	Violet
3	Gray		7	Red/White
4	Yellow		8	Plug

(8) Connector to the left boom harness

(9) Connector to the right boom harness

(10) Valve Driver (Pulse) Connector

PINOUT	COLOR		PINOUT	COLOR
1	Red		5	Green/White
2	Black		6	Violet
3	Plug		7	Green
4	Yellow		8	White

(11) Valve Driver (Boost) Connector

PINOUT	COLOR		PINOUT	COLOR
1	Red		5	Green/White
2	Black		6	Violet
3	Plug		7	Green
4	Yellow		8	White

11 Nozzle Power Hub - 18 ft (P/N - 118600-263) - No Boost

This power hub is used for these kits:

- 118600-241
- 118600-243
- 118600-247
- 118600-236

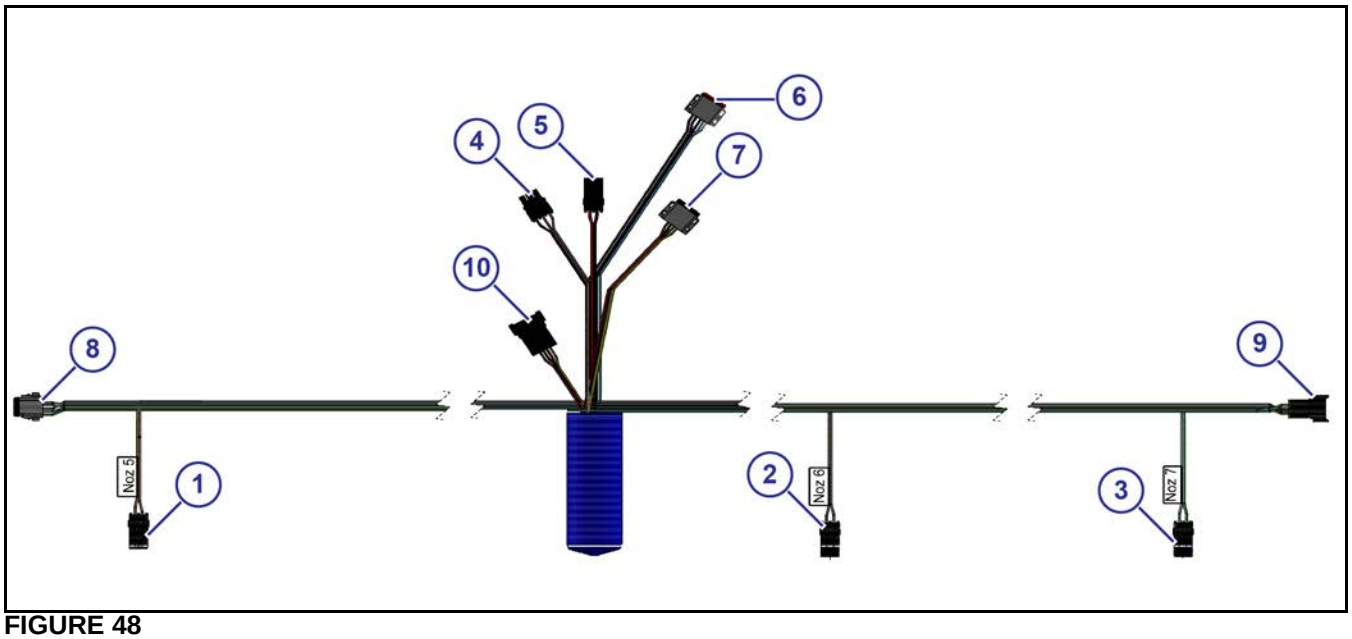

FIGURE 48
FIGURE 48:

(1) Nozzle 5 Connector

(2) Nozzle 6 Connector

(3) Nozzle 7 Connector

(4) Pressure Sensor Connector

(5) Connector to Power Harness (Battery)

(6) Boom Shutoff Adapter Connector

(7) Display Extension Harness

PINOUT	COLOR		PINOUT	COLOR
1	Red		5	Green/White
2	Black		6	Violet
3	Gray		7	Red/White
4	Yellow		8	Plug

(8) Connector to the left boom harness

(9) Connector to the right boom harness

(10) Valve Driver (Pulse) Connector

PINOUT	COLOR		PINOUT	COLOR
1	Red		5	Green/White
2	Black		6	Violet
3	Plug		7	Green
4	Yellow		8	White

©2017 Capstan Ag Systems Inc. | SharpShooter™ with Rate Sync™ for Turf

12 Nozzle Power Hub - 20 ft (P/N - 118600-266) - No Boost

This power hub is used for these kits:

- 118600-242
- 118600-244
- 118600-248

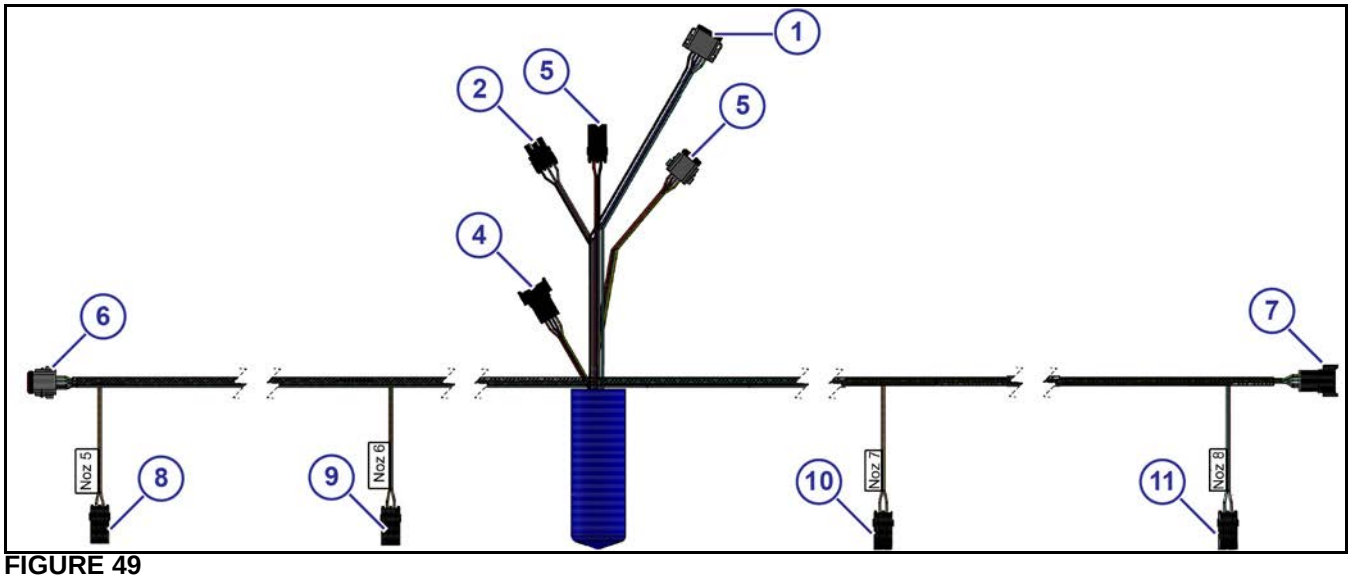

FIGURE 49
FIGURE 49:

(1) Boom Shutoff Adapter Connector

(2) Pressure Sensor Connector

(3) Display Extension Harness

PINOUT	COLOR		PINOUT	COLOR
1	Red		5	Green/White
2	Black		6	Violet
3	Gray		7	Red/White
4	Yellow		8	Plug

(4) Valve Driver (Pulse) Connector

PINOUT	COLOR		PINOUT	COLOR
1	Red		5	Green/White
2	Black		6	Violet
3	Plug		7	Green
4	Yellow		8	White

(5) Connector to Power Harness (Battery)

(6) Connector to the left boom harness

(7) Connector to the right boom harness

(8) Nozzle 6 Connector

(9) Nozzle 7 Connector

(10) Nozzle 8 Connector

(11) Nozzle 9 Connector

5-Section/17-Nozzle Power Hub (P/N - 118600-270) - No Boost

This power hub is used for these kits:

- 118600-239

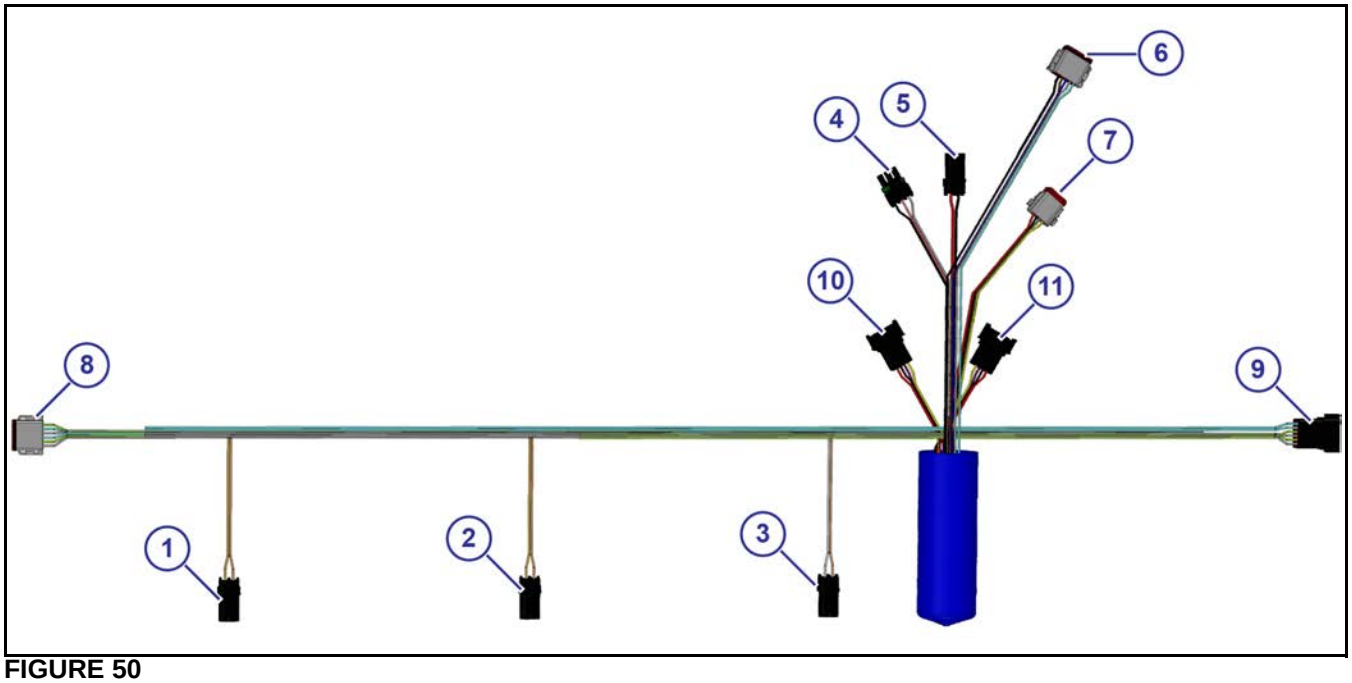

FIGURE 50
FIGURE 50:

(1) Nozzle 8 Connector

(2) Nozzle 9 Connector

(3) Nozzle 10 Connector

(4) Pressure Sensor Connector

(5) Connector to Power Harness (Battery)

(6) Boom Shutoff Adapter Connector

(7) Display Extension Harness

PINOUT	COLOR		PINOUT	COLOR
1	Red		5	Green/White
2	Black		6	Violet
3	Gray		7	Red/White
4	Yellow		8	Plug

(8) Connector to the left boom harness

(9) Connector to the right boom harness

(10) Valve Driver (Pulse) Connector

PINOUT	COLOR		PINOUT	COLOR
1	Red		5	Green/White
2	Black		6	Violet
3	Plug		7	Green
4	Yellow		8	White

(11) Valve Driver (Boost) Connector

PINOUT	COLOR		PINOUT	COLOR
1	Red		5	Green/White
2	Black		6	Violet
3	Plug		7	Green/Orange
4	Yellow		8	White/Orange

©2017 Capstan Ag Systems Inc. | SharpShooter™ with Rate Sync™ for Turf

13-Nozzle Center Power Hub (P/N - 118600-273) - No Boost

This power hub is used for these kits:

- 118600-237

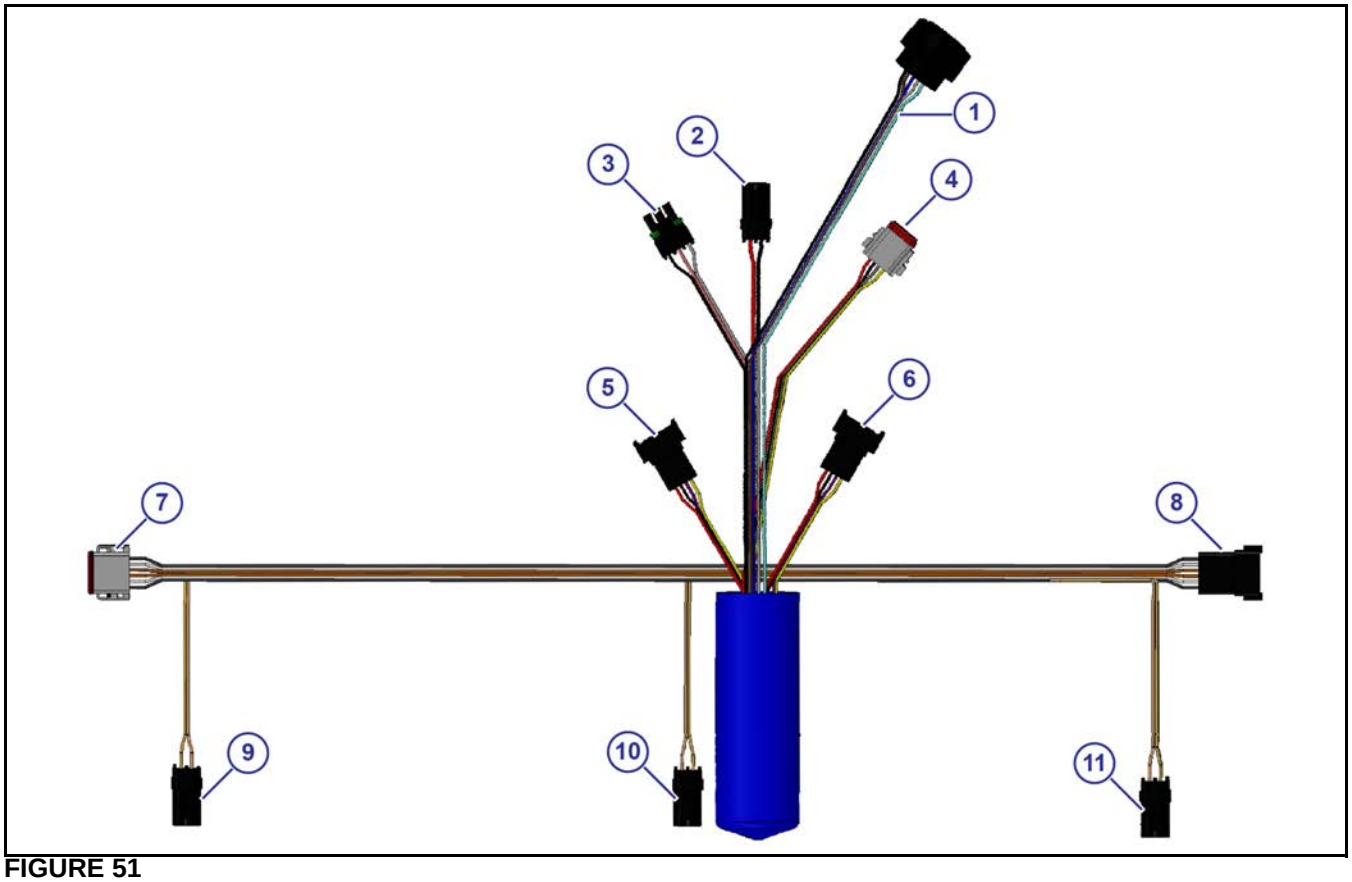

FIGURE 51
FIGURE 51:

(1) Boom Shutoff Adapter Connector

(2) Connector to Power Harness (Battery)

(3) Pressure Sensor Connector

(4) Display Extension Harness Connector

PINOUT	COLOR		PINOUT	COLOR
1	Red		5	Green/White
2	Black		6	Violet
3	Gray		7	Red/White
4	Yellow		8	Plug

(5) Valve Driver (Pulse) Connector

PINOUT	COLOR		PINOUT	COLOR
1	Red		5	Green/White
2	Black		6	Violet
3	Plug		7	Green
4	Yellow		8	White

(6) Valve Driver (Boost) Connector

PINOUT	COLOR		PINOUT	COLOR
1	Red		5	Green/White
2	Black		6	Violet
3	Plug		7	Green
4	Yellow		8	White

(7) Connector to the left boom harness

(8) Connector to the right boom harness

(9) Nozzle 6 Connector

(10) Nozzle 7 Connector

(11) Nozzle 8 Connector

LEFT BOOM HARNESS

3 or 9-Section/9-Nozzle Left Boom Harness (Nozzles 1 to 3) - 15 ft (P/N - 118600-251) - Boost

This left boom harness is used for these kits:

- 118600-230
- 118600-225

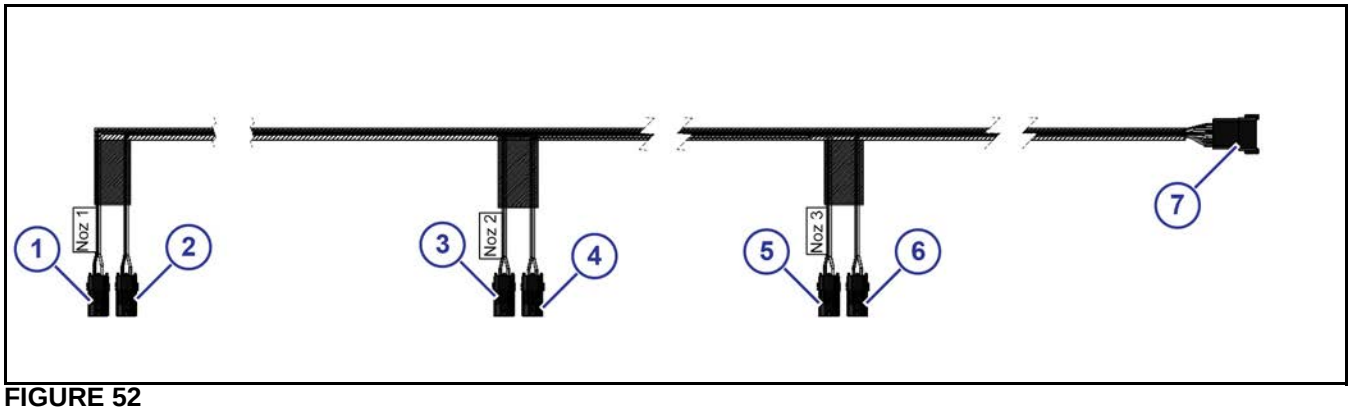

FIGURE 52

FIGURE 52:

(1) Nozzle 1 Connector - Pulse

(2) Nozzle 1 Connector- Boost

(3) Nozzle 2 Connector - Pulse

(4) Nozzle 2 Connector - Boost

(5) Nozzle 3 Connector - Pulse

(6) Nozzle 3 Connector- Boost

(7) Connector to the power hub harness

3 or 10-Section/11-Nozzle Left Boom Harness (Nozzles 1 to 4) - 18 ft (P/N - 118600-254) - Boost

This left boom harness is used for these kits:

- 118600-226
- 118600-227

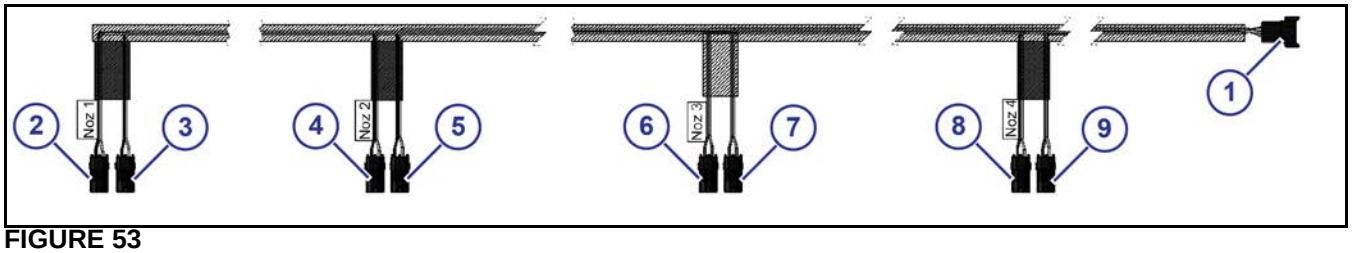

FIGURE 53

FIGURE 53:

(1) Connector to the power hub harness

(2) Nozzle 1 Connector - Pulse

(3) Nozzle 1 Connector - Boost

(4) Nozzle 2 Connector - Pulse

(5) Nozzle 2 Connector- Boost

(6) Nozzle 3 Connector- Pulse

(7) Nozzle 3 Connector - Boost

(8) Nozzle 4 Connector - Pulse

(9) Nozzle 4 Connector - Boost

©2017 Capstan Ag Systems Inc. | SharpShooter™ with Rate Sync™ for Turf

3 or 10-Section/12-Nozzle Left Boom Harness (Nozzles 1 to 4) - 20 ft (P/N - 118600-257) - Boost

This left boom harness is used for these kits:

- 118600-228
- 118600-229

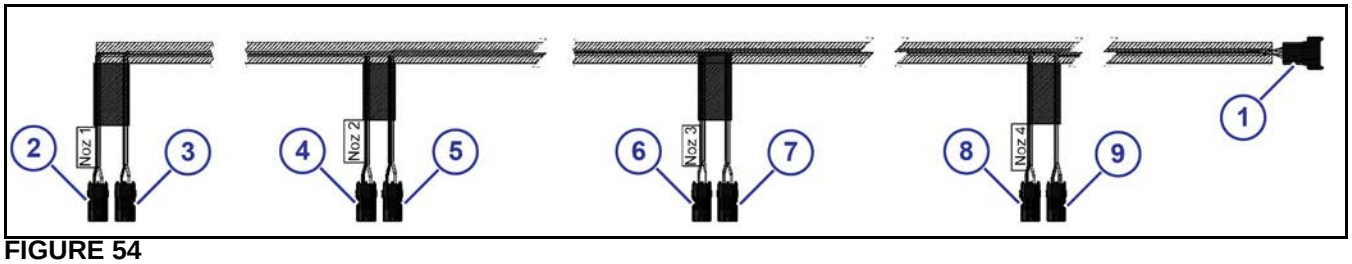

FIGURE 54

FIGURE 54:

(1) Connector to the power hub harness
(2) Nozzle 1 Connector - Pulse
(3) Nozzle 1 Connector - Boost
(4) Nozzle 2 Connector - Pulse
(5) Nozzle 2 Connector - Boost
(6) Nozzle 3 Connector - Pulse
(7) Nozzle 3 Connector - Boost
(8) Nozzle 4 Connector - Pulse
(9) Nozzle 4 Connector - Boost

3 or 9-Section/9-Nozzle Left Boom Harness (Nozzles 1 to 3) - 15 ft (P/N - 118600-261) - No Boost

This left boom harness is used for these kits:

- 118600-240
- 118600-245

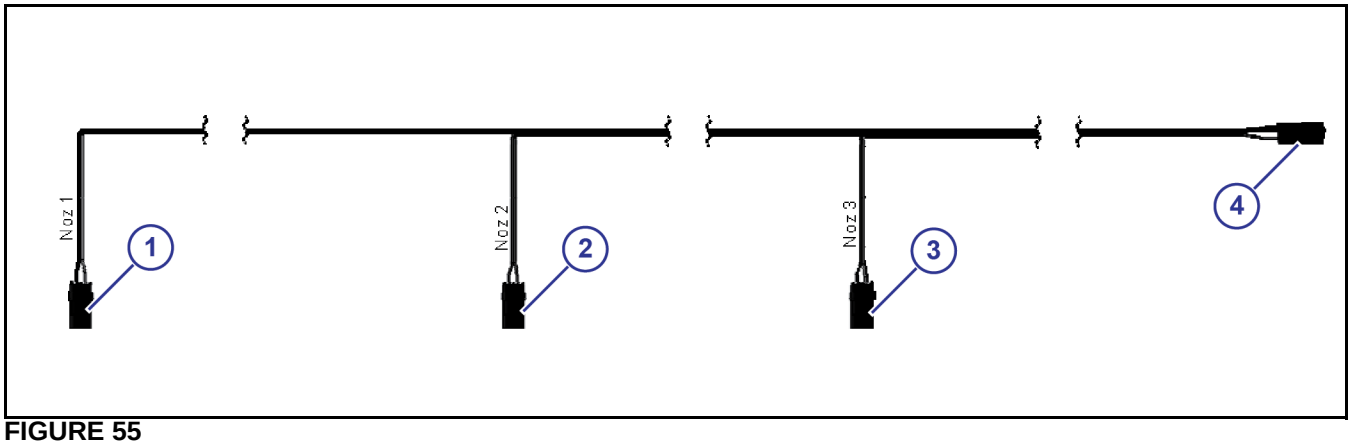

FIGURE 55

FIGURE 55:

(1) Nozzle 1 Connector
(2) Nozzle 2 Connector
(3) Nozzle 3 Connector
(4) Connector to the power hub harness

3 or 10-Section/11-Nozzle Left Boom Harness (Nozzles 1 to 4) - 18 ft (P/N - 118600-264) - No Boost

This left boom harness is used for these kits:

- 118600-241
- 118600-243
- 118600-247

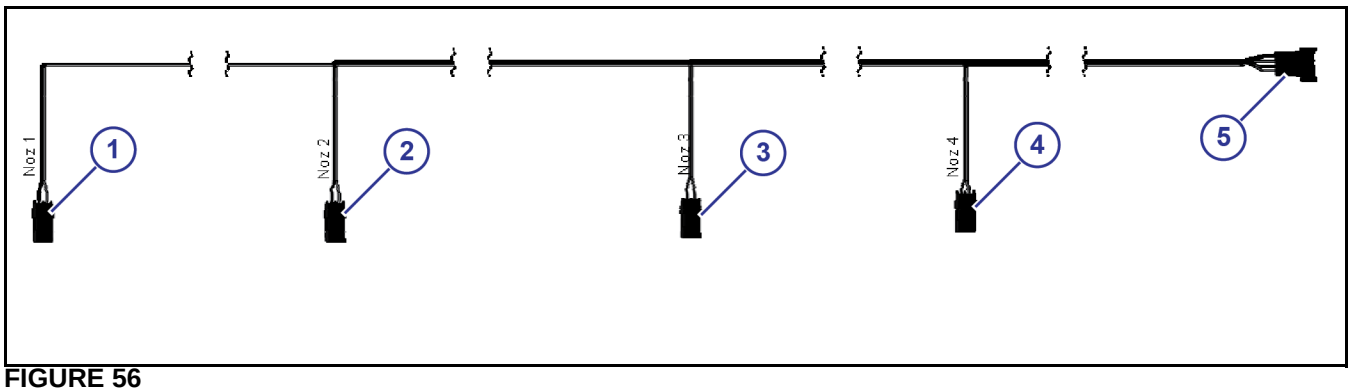

FIGURE 56
FIGURE 56:

(1) Nozzle 1 Connector
(2) Nozzle 2 Connector
(3) Nozzle 3 Connector
(4) Nozzle 4 Connector
(5) Connector to the power hub harness

3 or 10-Section/12-Nozzle Left Boom Harness (Nozzles 1 to 4) - 20 ft (P/N - 118600-267) - No Boost

This left boom harness is used for these kits:

- 118600-242
- 118600-244
- 118600-248

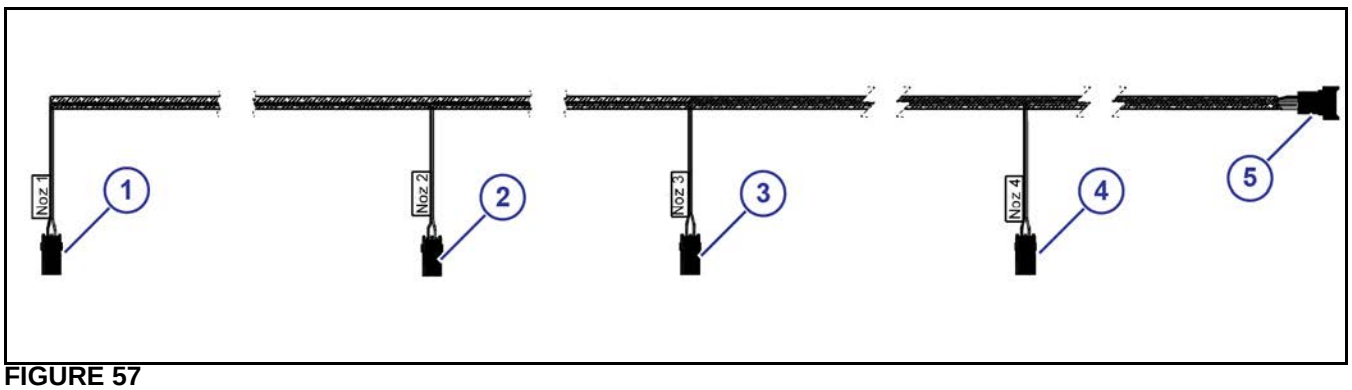

FIGURE 57
FIGURE 57:

(1) Nozzle 1 Connector
(2) Nozzle 2 Connector
(3) Nozzle 3 Connector
(4) Nozzle 4 Connector
(5) Connector to the power hub harness

©2017 Capstan Ag Systems Inc. | SharpShooter™ with Rate Sync™ for Turf

5-Section/17-Nozzle Left Boom Harness (Nozzles 1 to 7) (P/N - 118600-271) - No Boost

This left boom harness is used for this kit:

- 118600-239

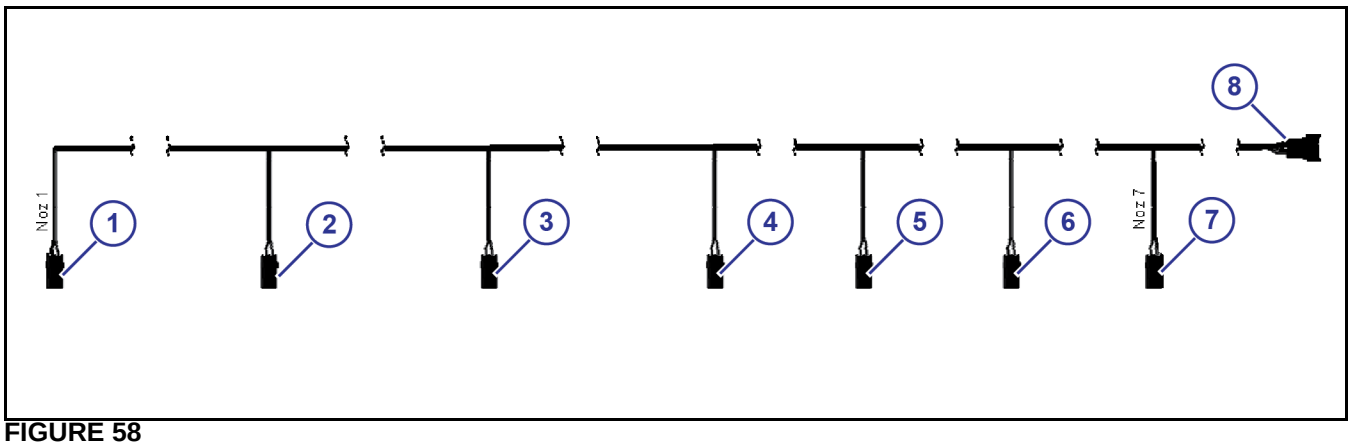

FIGURE 58

FIGURE 58:

(1) Nozzle 1 Connector
(2) Nozzle 2 Connector
(3) Nozzle 3 Connector
(4) Nozzle 4 Connector
(5) Nozzle 5 Connector
(6) Nozzle 6 Connector
(7) Nozzle 7 Connector
(8) Connector to the power hub harness

3-Section/13-Nozzle Left Boom Harness (P/N - 118600-274) - No Boost

This left boom harness is used for these kits:

- 118600-237

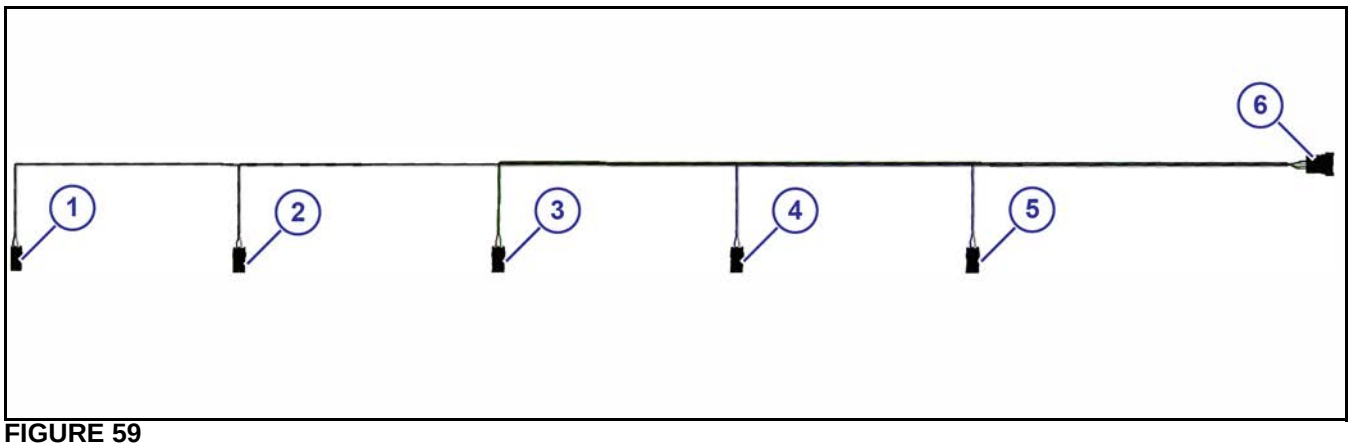

FIGURE 59

FIGURE 59:

(1) Nozzle 1 Connector
(2) Nozzle 2 Connector
(3) Nozzle 3 Connector
(4) Nozzle 4 Connector
(5) Nozzle 5 Connector
(6) Connector to the power hub harness

RIGHT BOOM HARNESSES

3 or 9-Section/9-Nozzle Right Boom Harness (Nozzles 7 to 9) - 15 ft (P/N - 118600-252) - Boost

This right boom harness is used for these kits:

- 118600-230
- 118600-225

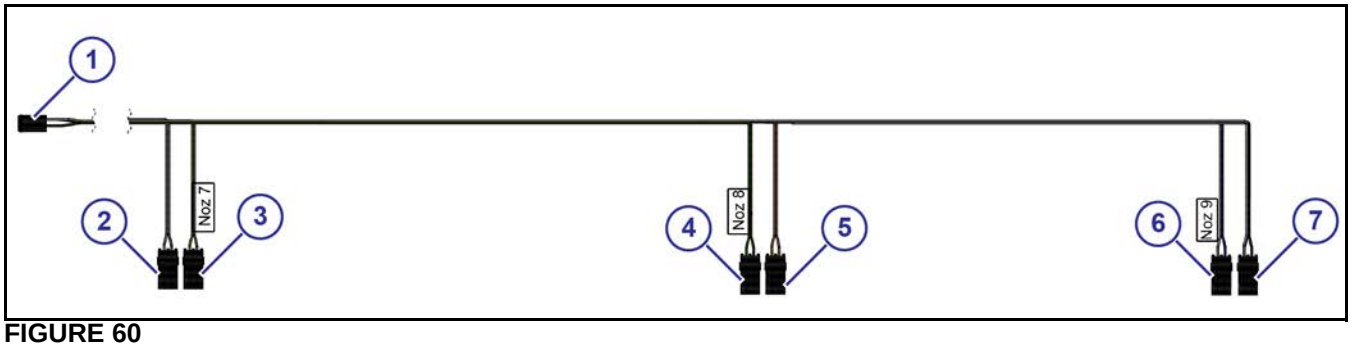

FIGURE 60
FIGURE 60:

(1) Connector to the power hub harness
(2) Nozzle 7 Connector - Pulse
(3) Nozzle 7 Connector - Boost
(4) Nozzle 8 Connector - Pulse
(5) Nozzle 8 Connector - Boost
(6) Nozzle 9 Connector - Pulse
(7) Nozzle 9 Connector - Boost

3 or 10-Section/11-Nozzle Right Boom Harness (Nozzles 8 to 11) - 18 ft (P/N - 118600-255) - Boost

This right boom harness is used for these kits:

- 118600-226
- 118600-227

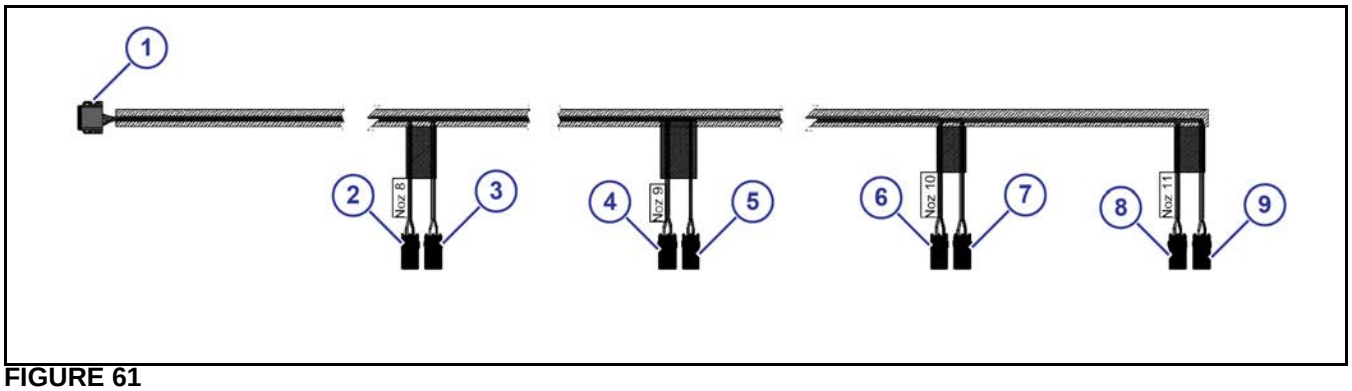

FIGURE 61
FIGURE 61:

(1) Connector to the power hub harness
(2) Nozzle 8 Connector - Pulse
(3) Nozzle 8 Connector - Boost
(4) Nozzle 9 Connector - Pulse
(5) Nozzle 9 Connector - Boost
(6) Nozzle 10 Connector - Pulse
(7) Nozzle 10 Connector - Boost
(8) Nozzle 11 Connector - Pulse
(9) Nozzle 11 Connector - Boost

©2017 Capstan Ag Systems Inc. | SharpShooter™ with Rate Sync™ for Turf

3 or 10-Section/12-Nozzle Right Boom Harness (Nozzles 9 to 12) - 20 ft (P/N - 118600-258) - Boost

This right boom harness is used for these kits:

- 118600-228
- 118600-229

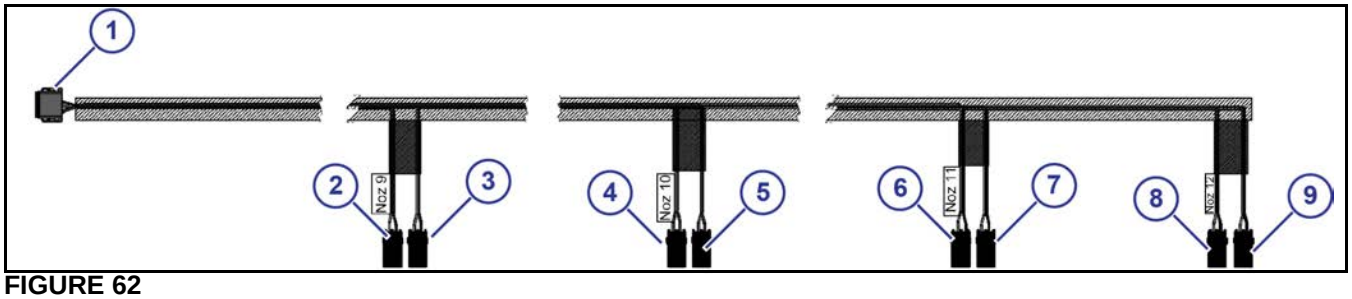

FIGURE 62

FIGURE 62:

(1) Connector to the power hub harness

(2) Nozzle 9 Connector - Pulse

(3) Nozzle 9 Connector - Boost

(4) Nozzle 10 Connector - Pulse

(5) Nozzle 10 Connector - Boost

(6) Nozzle 11 Connector - Pulse

(7) Nozzle 11 Connector - Boost

(9) Nozzle 12 Connector - Boost

(8) Nozzle 12 Connector - Pulse

3 or 9-Section/9-Nozzle Right Boom Harness (Nozzles 7 to 9) - 15 ft (P/N - 118600-262) - No Boost

This right boom harness is used for these kits:

- 118600-240
- 118600-245

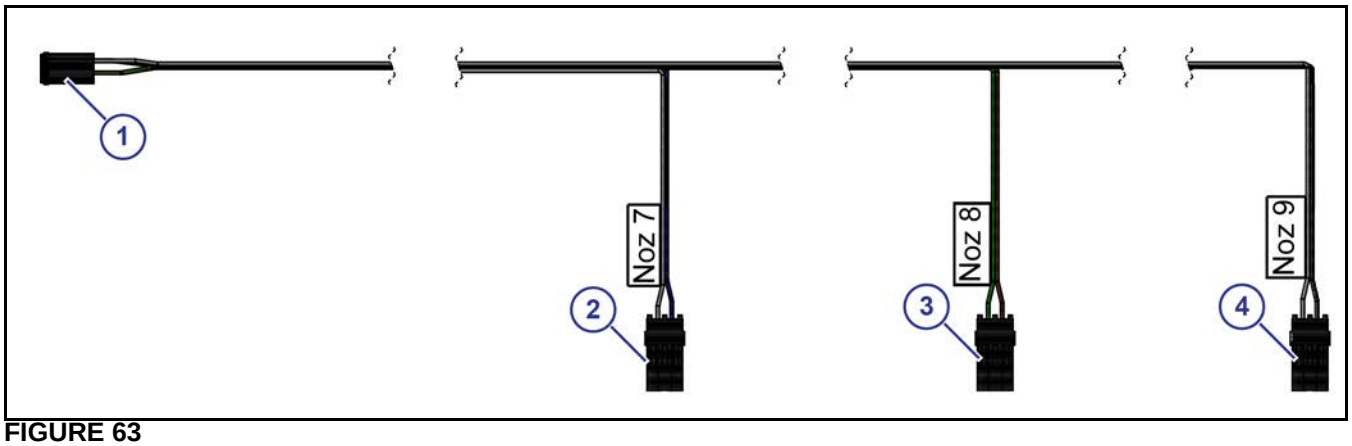

FIGURE 63

FIGURE 63:

(1) Connector to the power hub harness

(2) Nozzle 7 Connector

(3) Nozzle 8 Connector

(4) Nozzle 9 Connector

3 or 10-Section/11-Nozzle Right Boom Harness (Nozzles 8 to 11) - 18 ft (P/N - 118600-265) - No Boost

This right boom harness is used for these kits:

- 118600-241
- 118600-243
- 118600-247

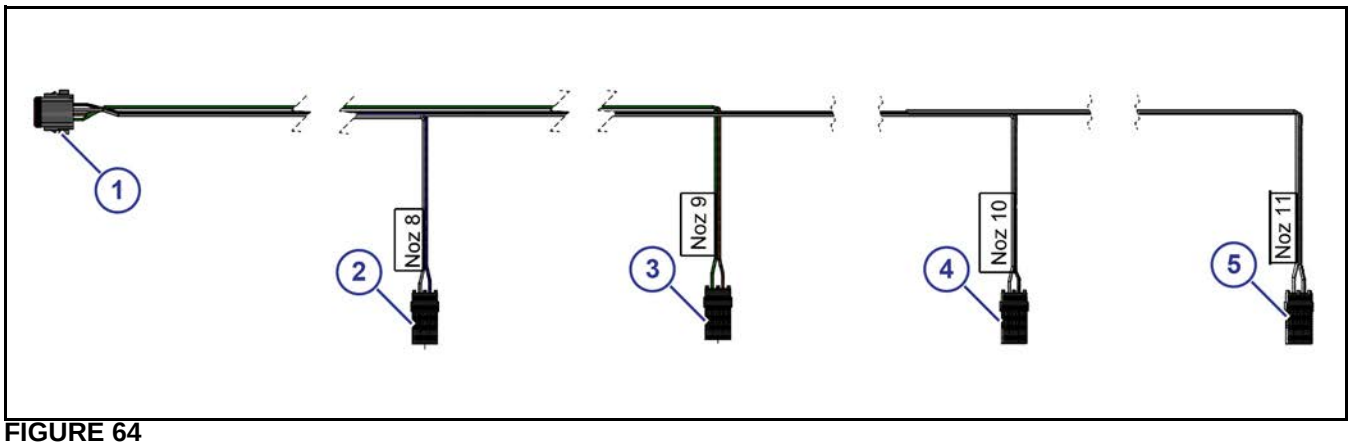

FIGURE 64
FIGURE 64:

(1) Connector to the power hub harness
(2) Nozzle 8 Connector
(3) Nozzle 9 Connector
(4) Nozzle 10 Connector
(5) Nozzle 11 Connector

3 or 10-Section/12-Nozzle Right Boom Harness (Nozzles 9 to 12) - 20 ft (P/N - 118600-268) - No Boost

This right boom harness is used for these kits:

- 118600-242
- 118600-244
- 118600-248

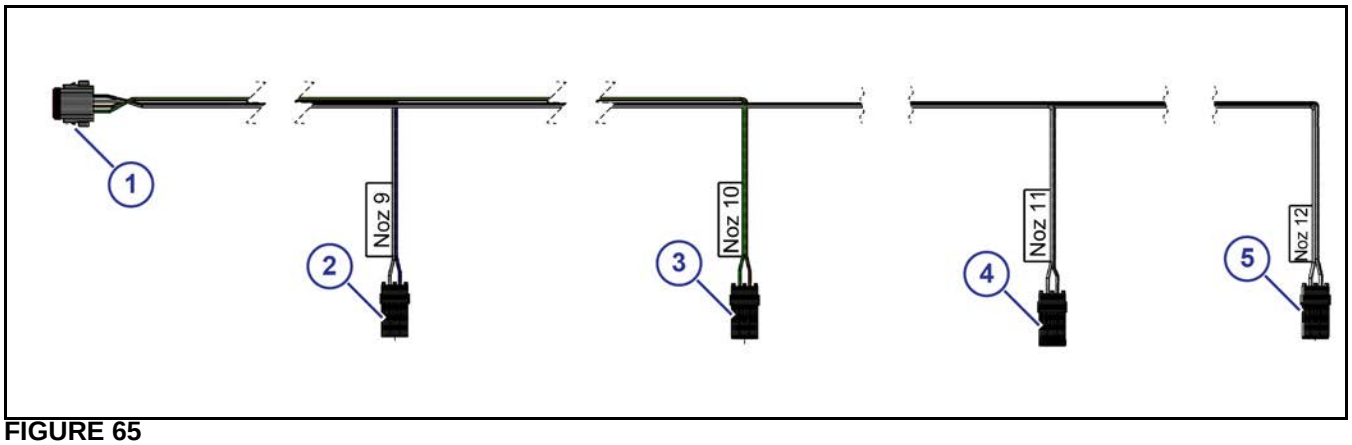

FIGURE 65
FIGURE 65:

(1) Connector to the power hub harness
(2) Nozzle 9 Connector
(3) Nozzle 10 Connector
(4) Nozzle 11 Connector

©2017 Capstan Ag Systems Inc. | SharpShooter™ with Rate Sync™ for Turf

(5) Nozzle 12 Connector

5-Section/17-Nozzle Left Boom Harness (Nozzles 11 to 17) (P/N - 118600-272) - No Boost

This right boom harness is used for this kit:

- 118600-239

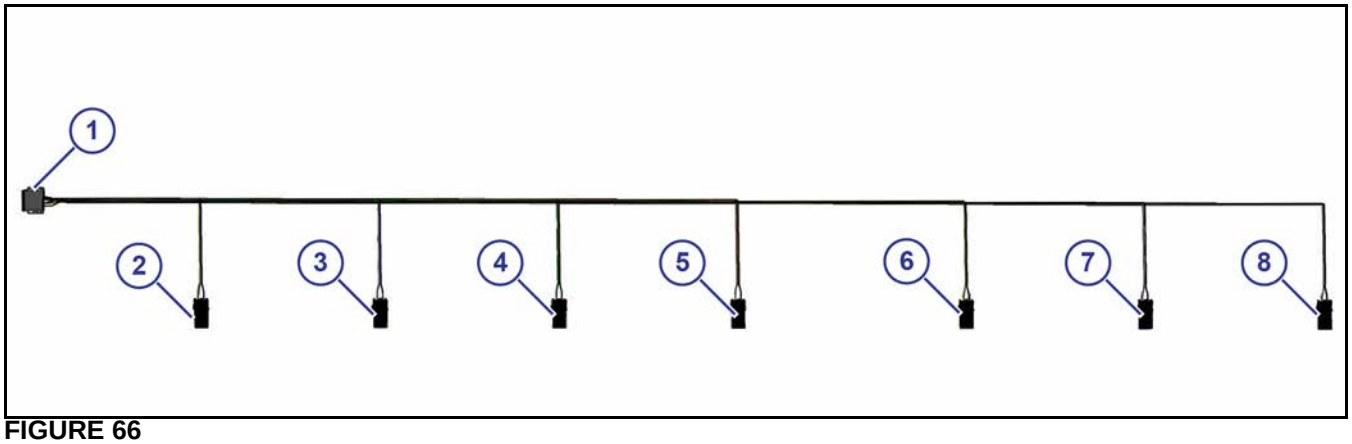

FIGURE 66

FIGURE 66:

(1) Connector to the power hub harness
(2) Nozzle 11 Connector
(3) Nozzle 12 Connector
(4) Nozzle 13 Connector
(5) Nozzle 14 Connector
(6) Nozzle 15 Connector
(7) Nozzle 16 Connector
(8) Nozzle 17 Connector

3-Section/13-Nozzle Right Boom Harness (P/N - 118600-275) - No Boost

This right boom harness is used for these kits:

- 118600-237

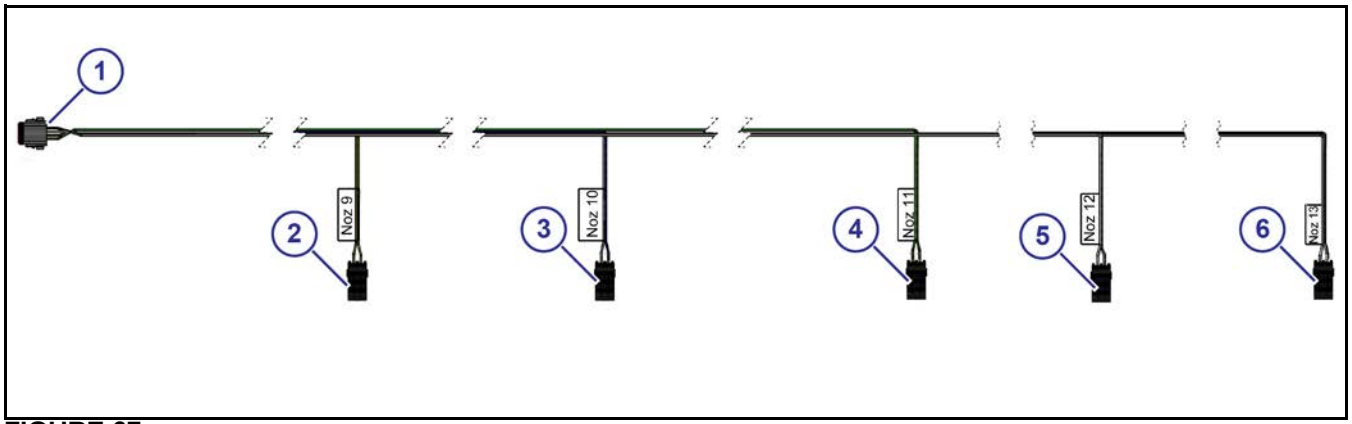

FIGURE 67

FIGURE 67:

(1) Connector to the power hub harness
(2) Nozzle 9 Connector
(3) Nozzle 10 Connector
(4) Nozzle 11 Connector
(5) Nozzle 12 Connector
(6) Nozzle 13 Connector

VALVE DRIVER MODULE

8-Pin DT (P/N - 118400-020)

These kits use one valve driver modules:

- 118600-200
- 118600-235
- 118600-236
- 118600-240
- 118600-241
- 118600-242
- 118600-243
- 118600-244
- 118600-245
- 118600-247
- 118600-248

These kits use two valve driver modules:

- 118600-201
- 118600-202
- 118600-206
- 118600-207
- 118600-208
- 118600-225
- 118600-226
- 118600-228
- 118600-230
- 118600-237
- 118600-238

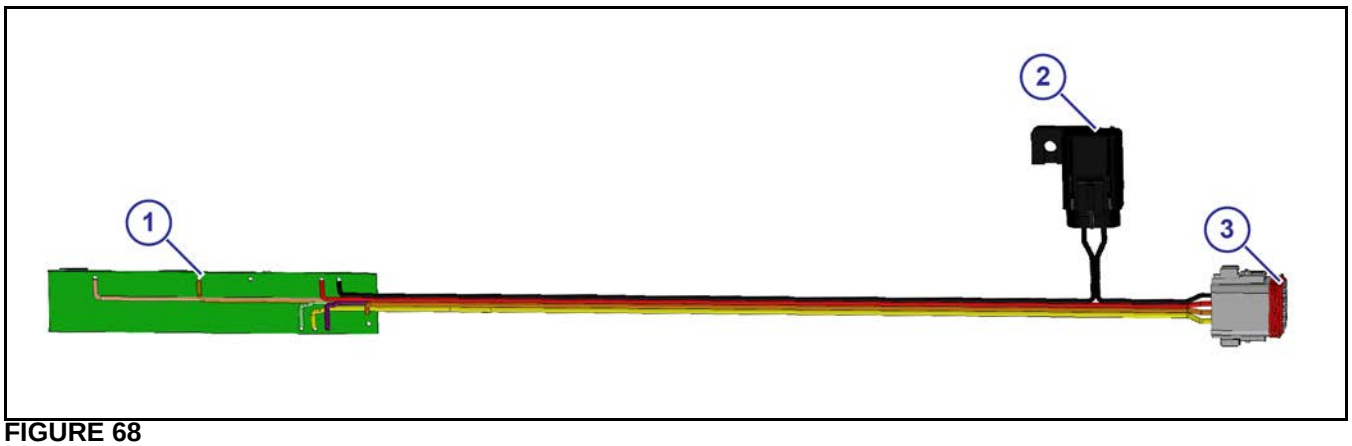

FIGURE 68
FIGURE 68:

(1) Valve Driver

(2) Fuse

(3) Connector to the Power Hub Harness

PINOUT	COLOR		PINOUT	COLOR
1	Red		5	Green/White
2	Black		6	Violet
3	Orange		7	Green/Orange
4	Yellow		8	White/Orange

©2017 Capstan Ag Systems Inc. | SharpShooter™ with Rate Sync™ for Turf

POWER HARNESS

Power Harness - 14 ft for SmithCo/Toro/FS Manufacturing (P/N - 118600-107)

This power harness is used for these kits:

- 118600-230
- 118600-225
- 118600-226
- 118600-228
- 118600-239
- 118600-240
- 118600-241
- 118600-242
- 118600-243
- 118600-244
- 118600-245
- 118600-235
- 118600-236
- 118600-237

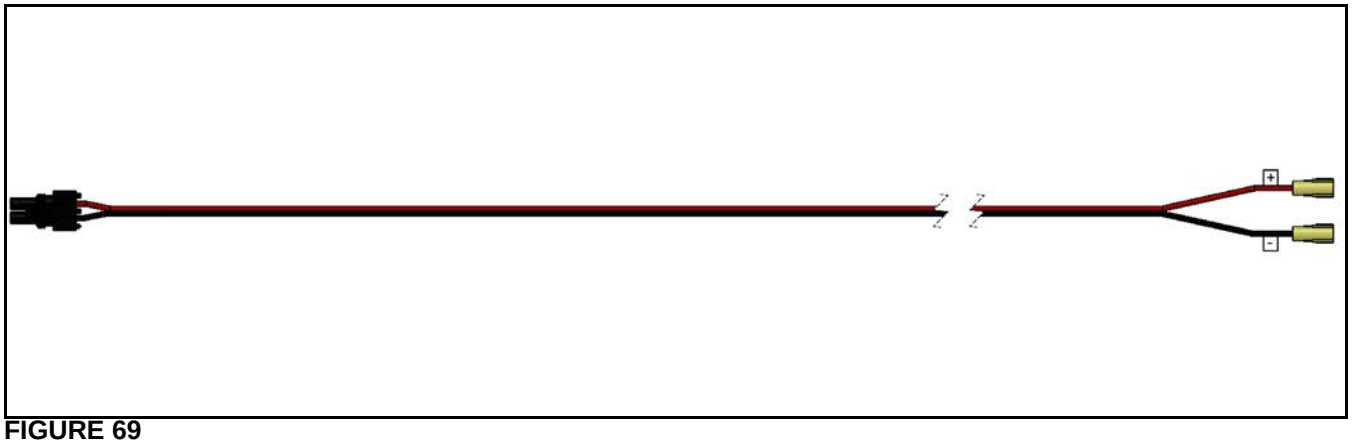

FIGURE 69
FIGURE 69:

Power Harness - 18 ft for Jacobsen (with 5A fuse) (P/N - 118600-109)

This power harness is used for these kits:

- 118600-247
- 118600-248

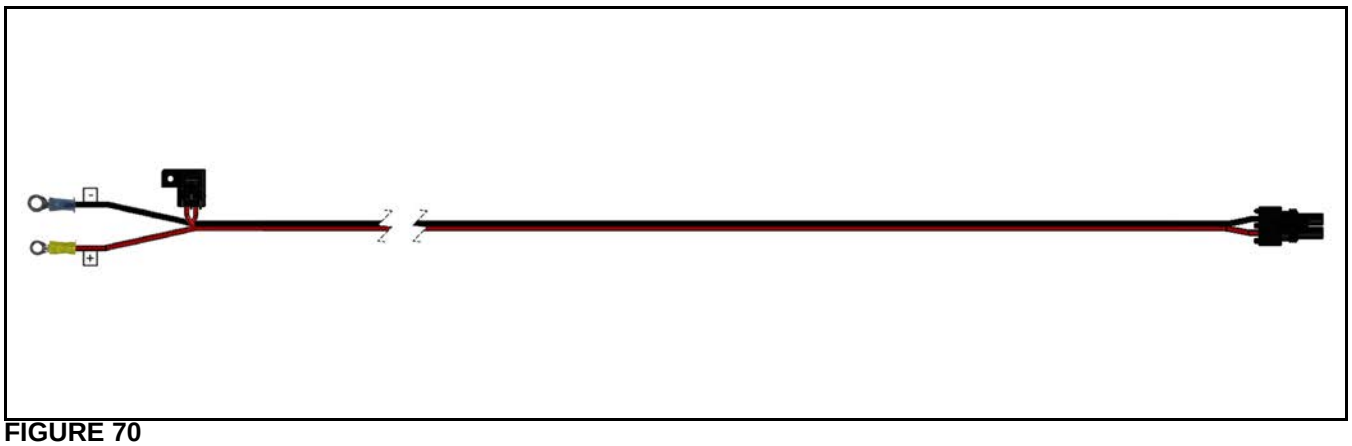

FIGURE 70
FIGURE 70:

DISPLAY

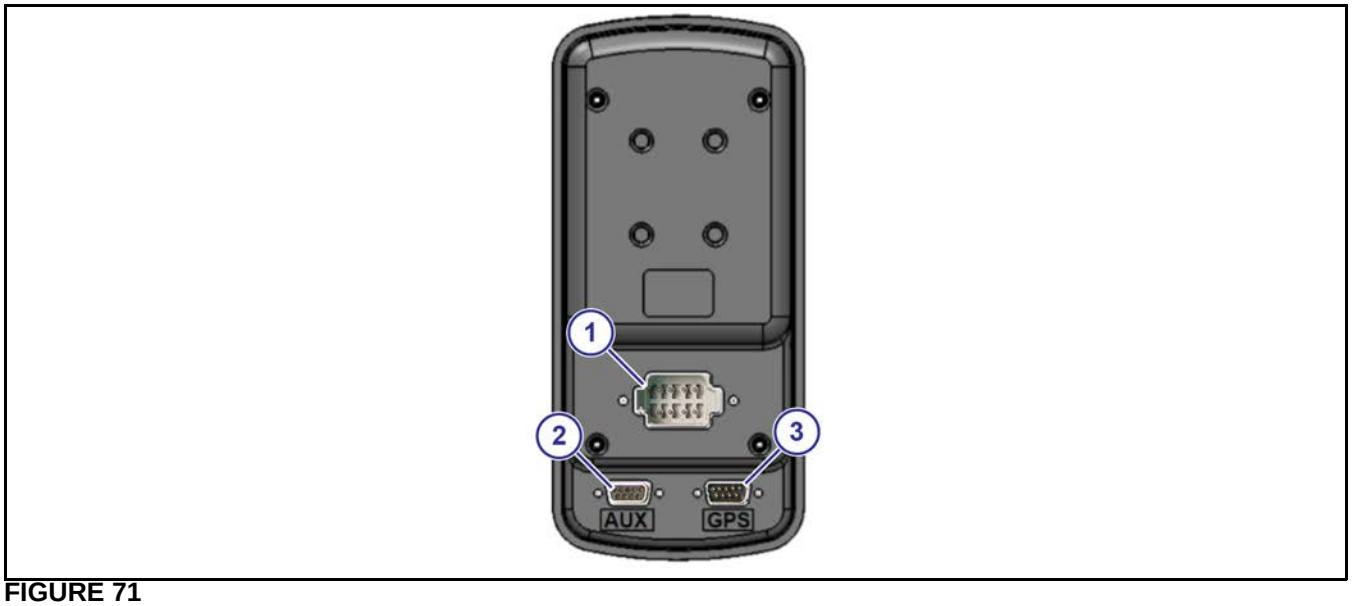

FIGURE 71
FIGURE 71:

(1) Power Connector

PINOUT	COLOR	DESCRIPTION
1	Red	Power
2	Black	Ground
3	Blue	Pressure Sensor
4	Yellow	Odd Pulse
5	Green	Even Pulse
6	Brown	Run/Hold
7	Red/White Stripe	Switched Power
8	Not Used	

(2) (Diagnostics) Auxiliary Connector

(3) GPS Connector

©2017 Capstan Ag Systems Inc. | SharpShooter™ with Rate Sync™ for Turf

DISPLAY EXTENSION HARNESS

There are two display extension harnesses. The only difference is the length of the harness.

18 ft Extension Harness - Jacobsen
(P/N - 118600-106)

- This extension harness is used for these kits:
  - 118600-247
  - 118600-248

14 ft Extension Harness - SmithCo/Toro
(P/N - 118600-110)

- This extension harness is used for these kits:
  - 118600-230
  - 118600-225
  - 118600-226
  - 118600-227
  - 118600-228
  - 118600-229
  - 118600-239
  - 118600-240
  - 118600-241
  - 118600-242
  - 118600-243
  - 118600-244
  - 118600-245
  - 118600-237

FIGURE 72
FIGURE 72:

(1) Connector to the display

PINOUT	COLOR		PINOUT	COLOR
1	Red		5	Green/White
2	Black		6	Violet
3	Gray		7	Red/White
4	Yellow		8	Orange

(2) Connector to the power hub connector

PINOUT	COLOR		PINOUT	COLOR
1	Red		5	Green/White
2	Black		6	Violet
3	Gray		7	Red/White
4	Yellow		8	Orange

BOOM SHUTOFF HARNESS

3-Section/13-Nozzle Boom Shutoff Harness - John Deere (P/N - 118602-103)

This boom shutoff harness is used for this kit:

- 118600-237

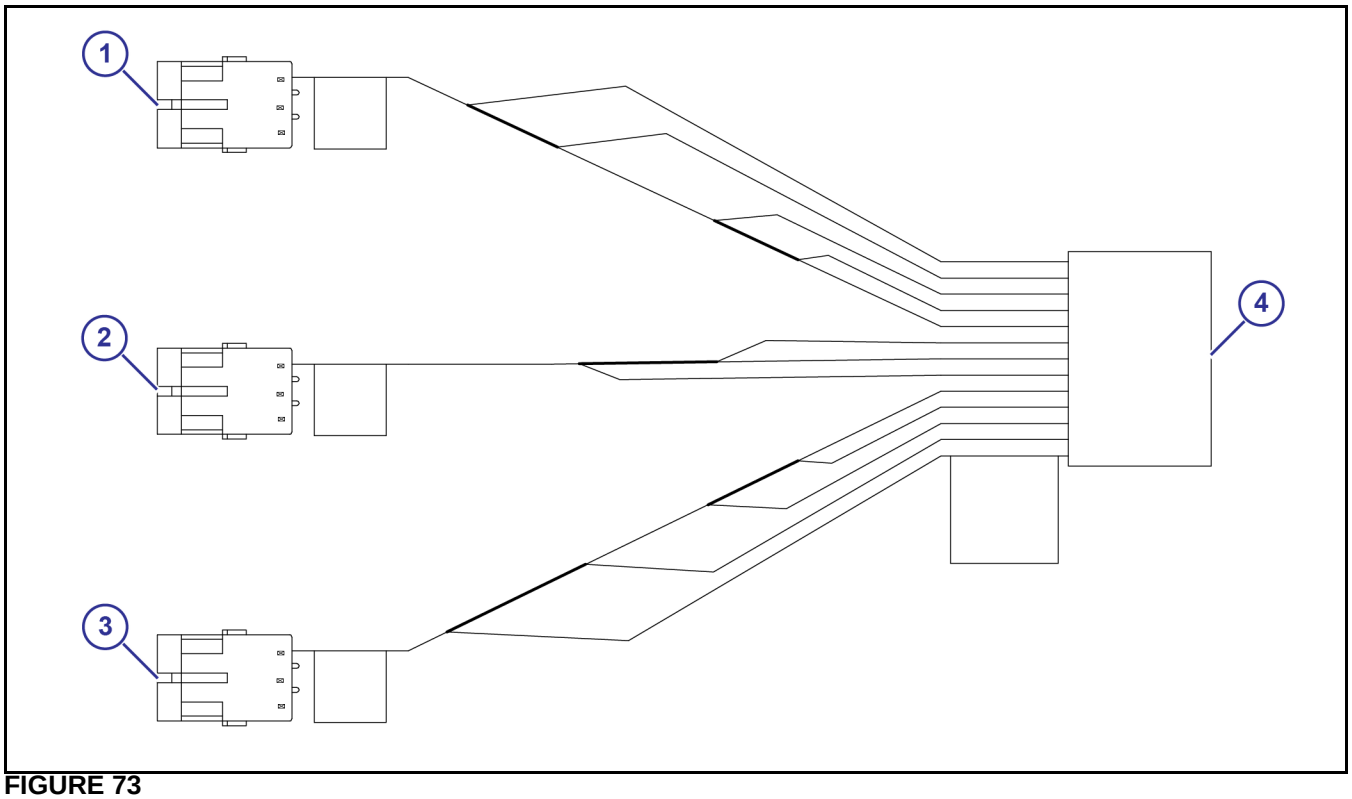

FIGURE 73
FIGURE 73:

(1) Connector to the Boom Section 1 Wire

(2) Connector to the Boom Section 2 Wire

(3) Connector to the Boom Section 3 Wire

(4) Connector to Power Hub

PINOUT	COLOR		PINOUT	COLOR
1	Red		5	Green/White
2	Black		6	Violet
3	Gray		7	Red/White
4	Yellow		8	Orange

©2017 Capstan Ag Systems Inc. | SharpShooter™ with Rate Sync™ for Turf

3-Section/11-Nozzle Boom Shutoff Harness - John Deere (P/N - 118602-104)

This boom shutoff harness is used for this kit:

- 118600-237

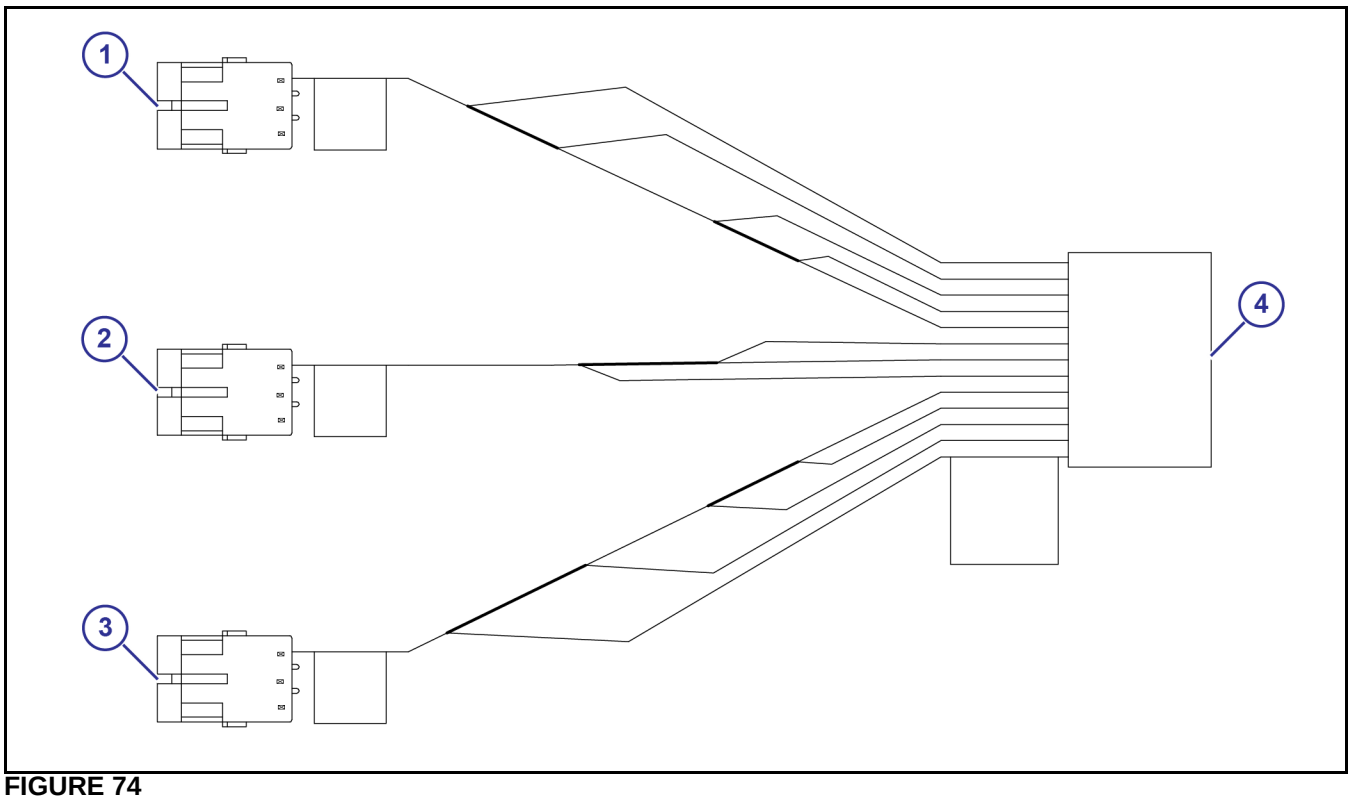

FIGURE 74
FIGURE 74:

(1) Connector to the Boom Section 1 Wire

(2) Connector to the Boom Section 2 Wire

(3) Connector to the Boom Section 3 Wire

(4) Connector to Power Hub

PINOUT	COLOR		PINOUT	COLOR
1	Red		5	Green/White
2	Black		6	Violet
3	Gray		7	Red/White
4	Yellow		8	Orange

5-Section/17-Nozzle Boom (Specialty Enterprise Booms) (P/N - 118602-105) - No Boost

This boom shutoff harness is used for this kit:

- 118600-239

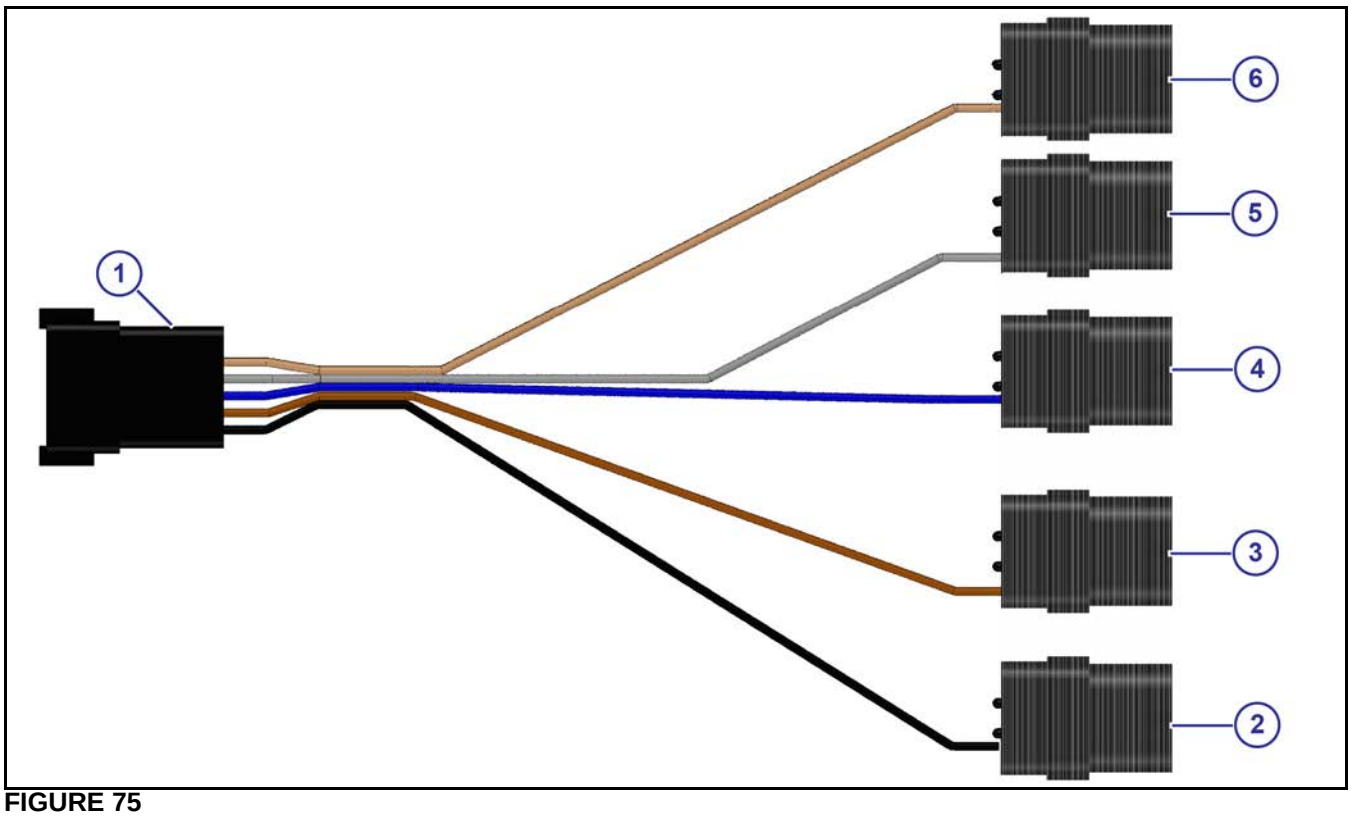

FIGURE 75
FIGURE 75:

(1) Connector to the Power Hub

PINOUT	COLOR		PINOUT	COLOR
1	Red		5	Green/White
2	Black		6	Violet
3	Gray		7	Red/White
4	Yellow		8	Orange

(2) Connector to the Boom Section 1 Wire

(3) Connector to the Boom Section 2 Wire

(4) Connector to the Boom Section 3 Wire

(5) Connector to the Boom Section 4 Wire

(6) Connector to the Boom Section 5 Wire

©2017 Capstan Ag Systems Inc. | SharpShooter™ with Rate Sync™ for Turf

3-Section/11-Nozzle Raven 440 Boom (Spade Terminals) (P/N - 118602-115)

This boom shutoff harness is used for this kit:

- 118600-227

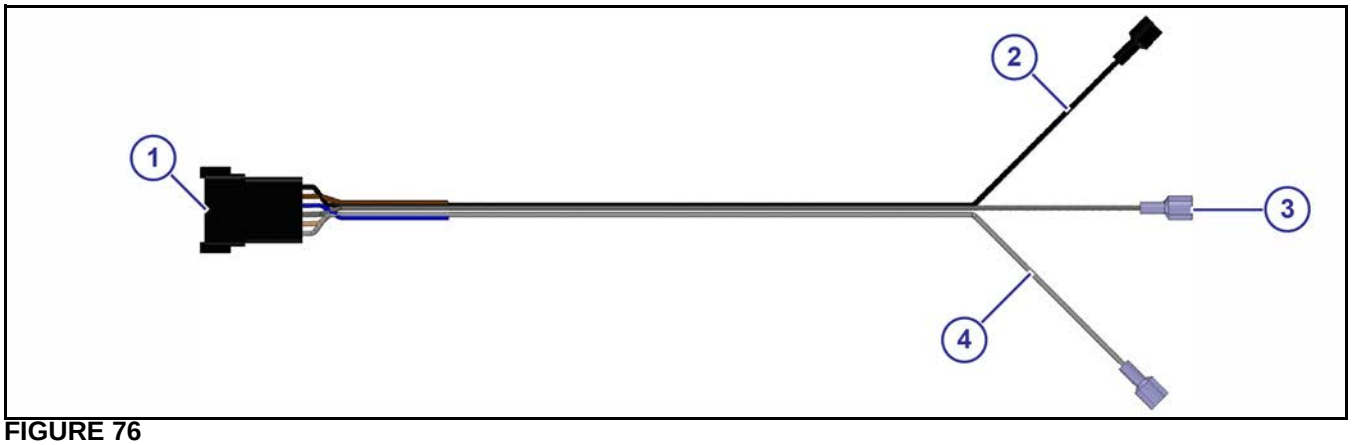

FIGURE 76
FIGURE 76:

(1) Connector to the Power Hub

PINOUT	COLOR		PINOUT	COLOR
1	Red		5	Green/White
2	Black		6	Violet
3	Gray		7	Red/White
4	Yellow		8	Orange

(2) Connector to the Boom Section 1 Wire

(3) Connector to the Boom Section 2 Wire

(4) Connector to the Boom Section 3 Wire

3-Section/9-Nozzle Raven 440 Boom - Toro/FS Manufacturing (P/N - 118602-117)

This boom shutoff harness is used for this kit:

- 118600-225
- 118600-235

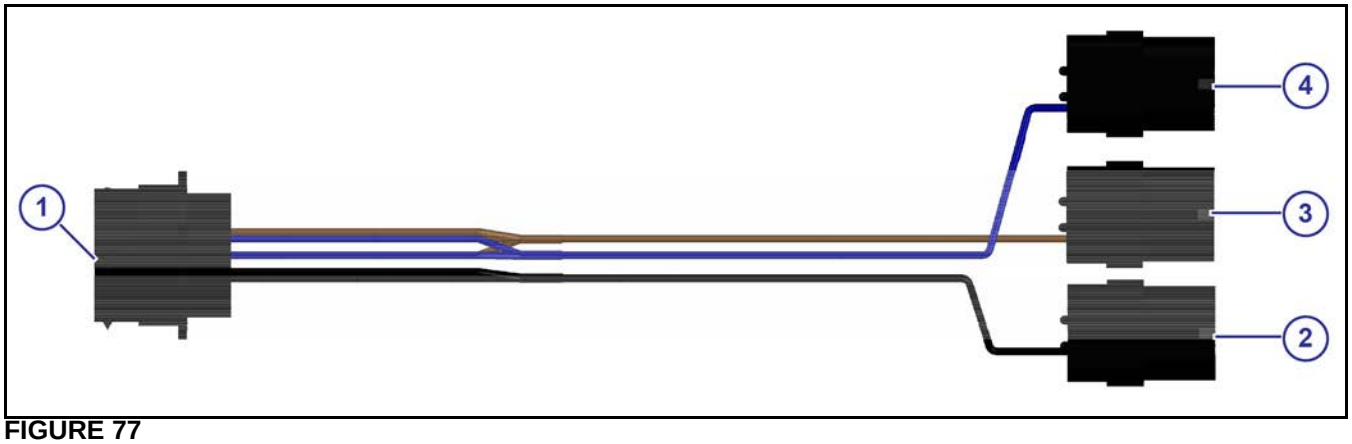

FIGURE 77
FIGURE 77:

(1) Connector to the Power Hub

PINOUT	COLOR		PINOUT	COLOR
1	Red		5	Green/White
2	Black		6	Violet
3	Gray		7	Red/White
4	Yellow		8	Orange

(2) Connector to the Boom Section 1 Wire

(3) Connector to the Boom Section 2 Wire

(4) Connector to the Boom Section 3 Wire

©2017 Capstan Ag Systems Inc. | SharpShooter™ with Rate Sync™ for Turf

9-Section/9-Nozzle - Jacobsen (P/N 118602-118)

This boom shutoff harness is used for this kit:

- 118600-202

FIGURE 78
FIGURE 78:

(1) Connector to the Power Hub

(2) Connector to the Boom Section Harness

PINOUT	COLOR		PINOUT	COLOR
1	Red		5	Green/White
2	Black		6	Violet
3	Gray		7	Red/White
4	Yellow		8	Orange

3-Section/9-Nozzle - Jacobsen (P/N 118602-119)

This boom shutoff harness is used for this kit:

- 118600-202

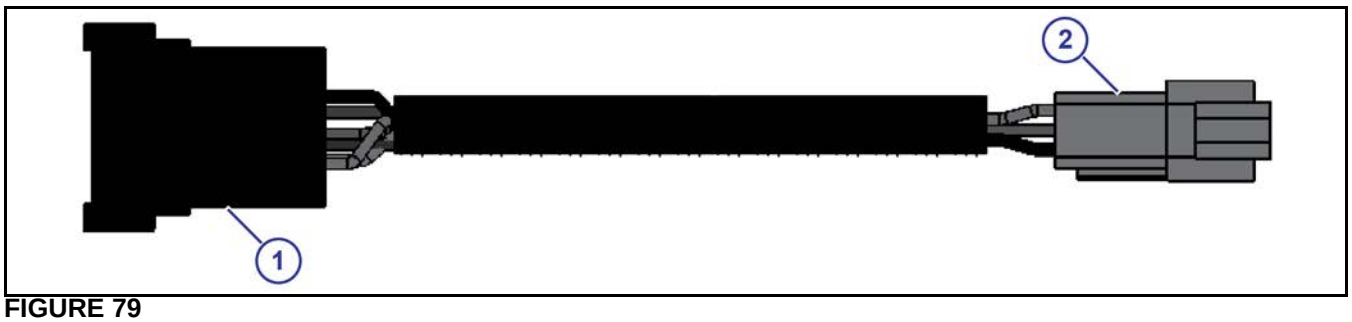

FIGURE 79
FIGURE 79:

(1) Connector to the Power Hub

PINOUT	COLOR		PINOUT	COLOR
1	Red		5	Green/White
2	Black		6	Violet
3	Gray		7	Red/White
4	Yellow		8	Orange

(2) Connector to the Boom Section Harness

10-Section/11-Nozzle Raven Envizio Boom - SmithCo/Toro (P/N - 118602-127)

This boom shutoff harness is used for these kits:

- 118600-226
- 118600-243

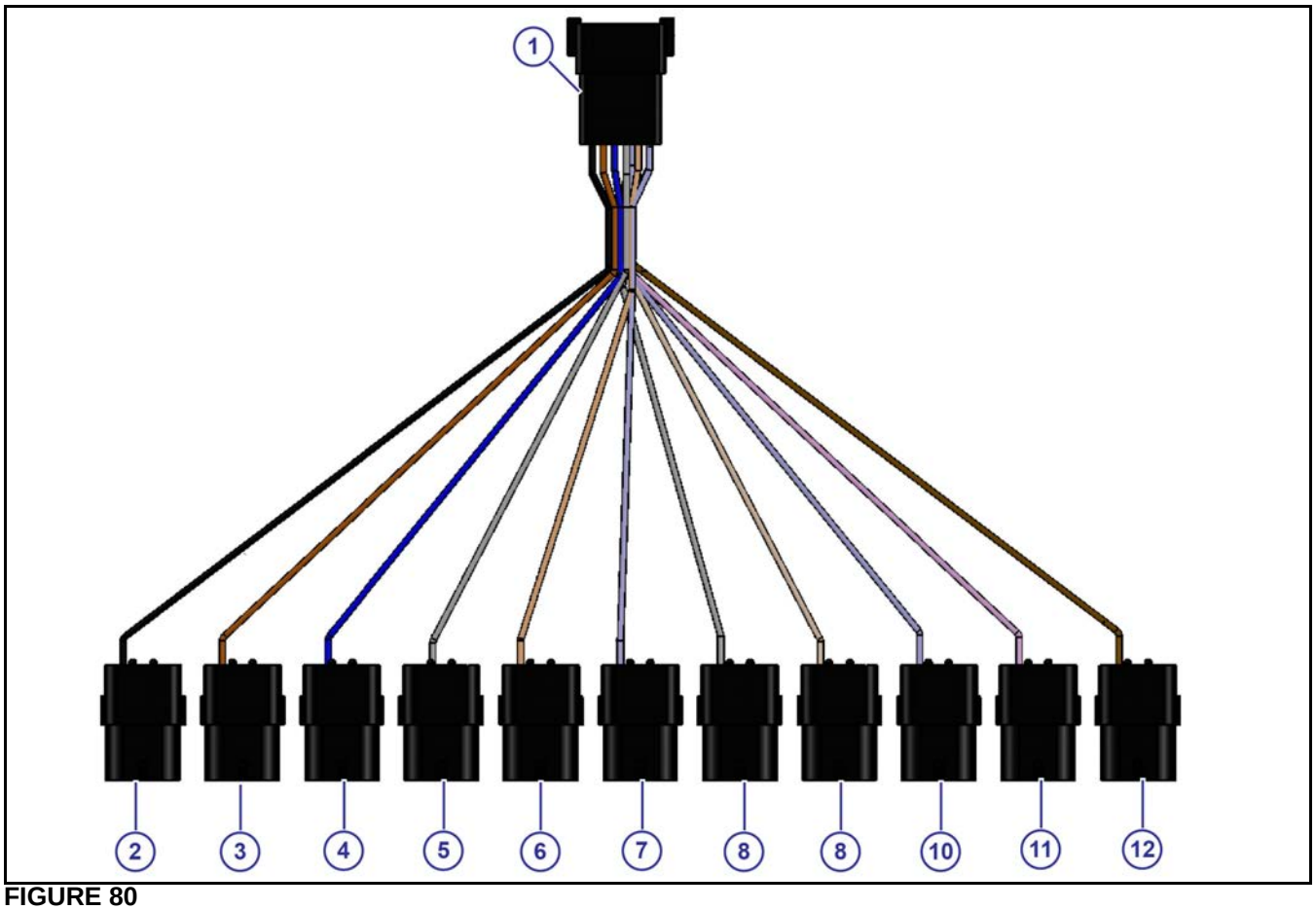

FIGURE 80
FIGURE 80:

(1) Connector to the Power Hub

PINOUT	COLOR		PINOUT	COLOR
1	Red		5	Green/White
2	Black		6	Violet
3	Gray		7	Red/White
4	Yellow		8	Orange

(2) Connector to the Boom Section 1 Wire

(3) Connector to the Boom Section 2 Wire

(4) Connector to the Boom Section 3 Wire

(5) Connector to the Boom Section 4 Wire

(6) Connector to the Boom Section 5 Wire

(7) Connector to the Boom Section Y-adapter and then to the Boom Section 6 wire

(8) Connector to the Boom Section Y-adapter and then to the Boom Section 6 Wire

(9) Connector to the Boom Section 7 Wire

(10) Connector to the Boom Section 8 Wire

(11) Connector to the Boom Section 9 Wire

(12) Connector to the Boom Section 10 Wire

©2017 Capstan Ag Systems Inc. | SharpShooter™ with Rate Sync™ for Turf

10-Section/12-Nozzle Raven Envzio Boom SmithCo/Toro (P/N - 118602-128)

This boom shutoff harness is used for these kits:

- 118600-228
- 118600-244

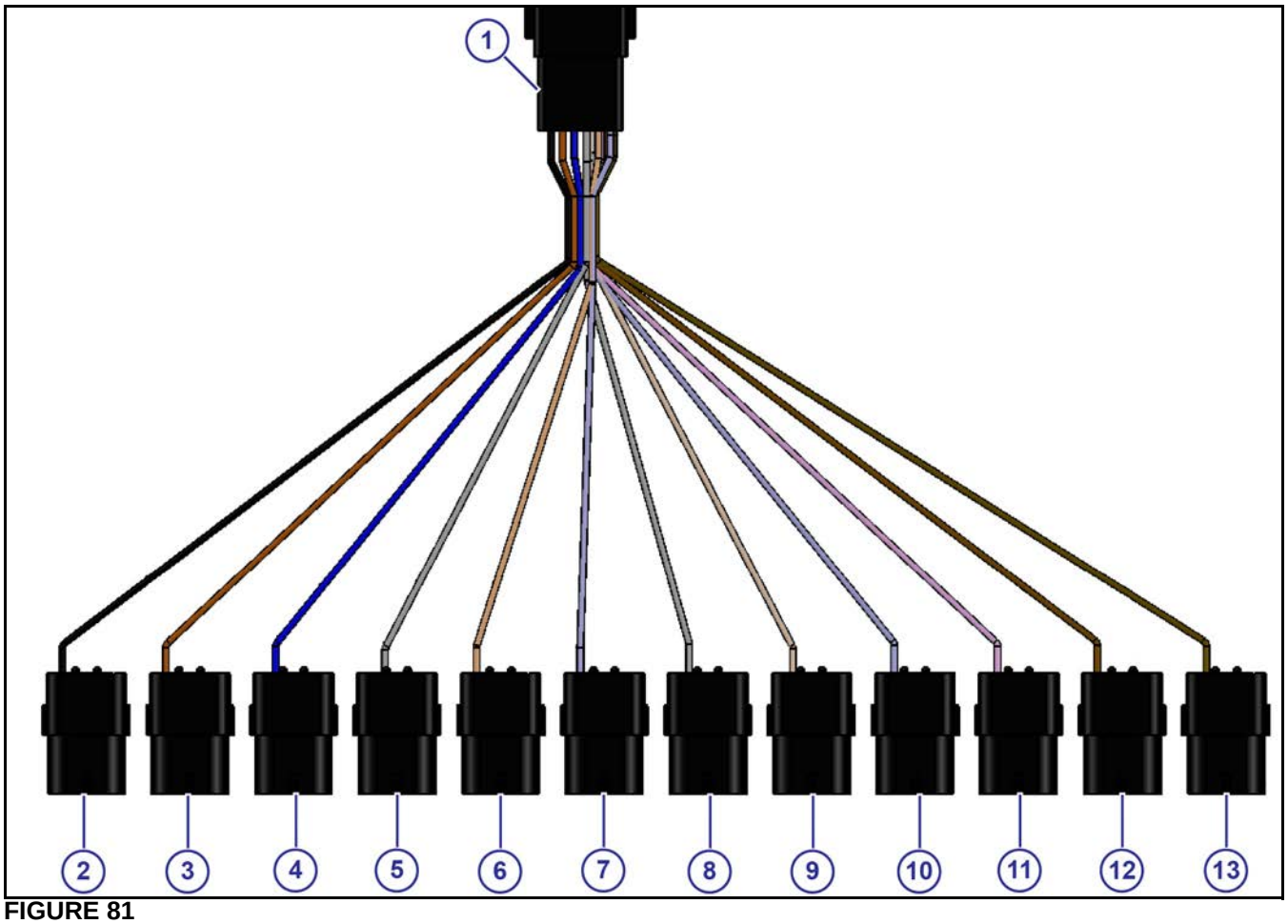

FIGURE 81

FIGURE 81:

(1) Connector to the Power Hub

PINOUT	COLOR		PINOUT	COLOR
1	Red		5	Green/White
2	Black		6	Violet
3	Gray		7	Red/White
4	Yellow		8	Orange

(2) Connector to the Boom Section 1 Wire

(3) Connector to the Boom Section 2 Wire

(4) Connector to the Boom Section 3 Wire

(5) Connector to the Boom Section 4 Wire

(6) Connector to the Boom Section Y-adapter and then to the Boom Section 5 Wire

(7) Connector to the Boom Section Y-adapter and then to the Boom Section 5 Wire

(8) Connector to the Boom Section Y-adapter and then to the Boom Section 6 Wire

(9) Connector to the Boom Section Y-adapter and then to the Boom Section 6 Wire

(10) Connector to the Boom Section 7 Wire

(11) Connector to the Boom Section 8 Wire

(12) Connector to the Boom Section 9 Wire

(13) Connector to the Boom Section 10 Wire

9-Section/9-Nozzle Raven Envizio Boom - SmithCo/Toro (P/N - 118602-129)

This boom shutoff harness is used for these kits:

- 118600-230
- 118600-245

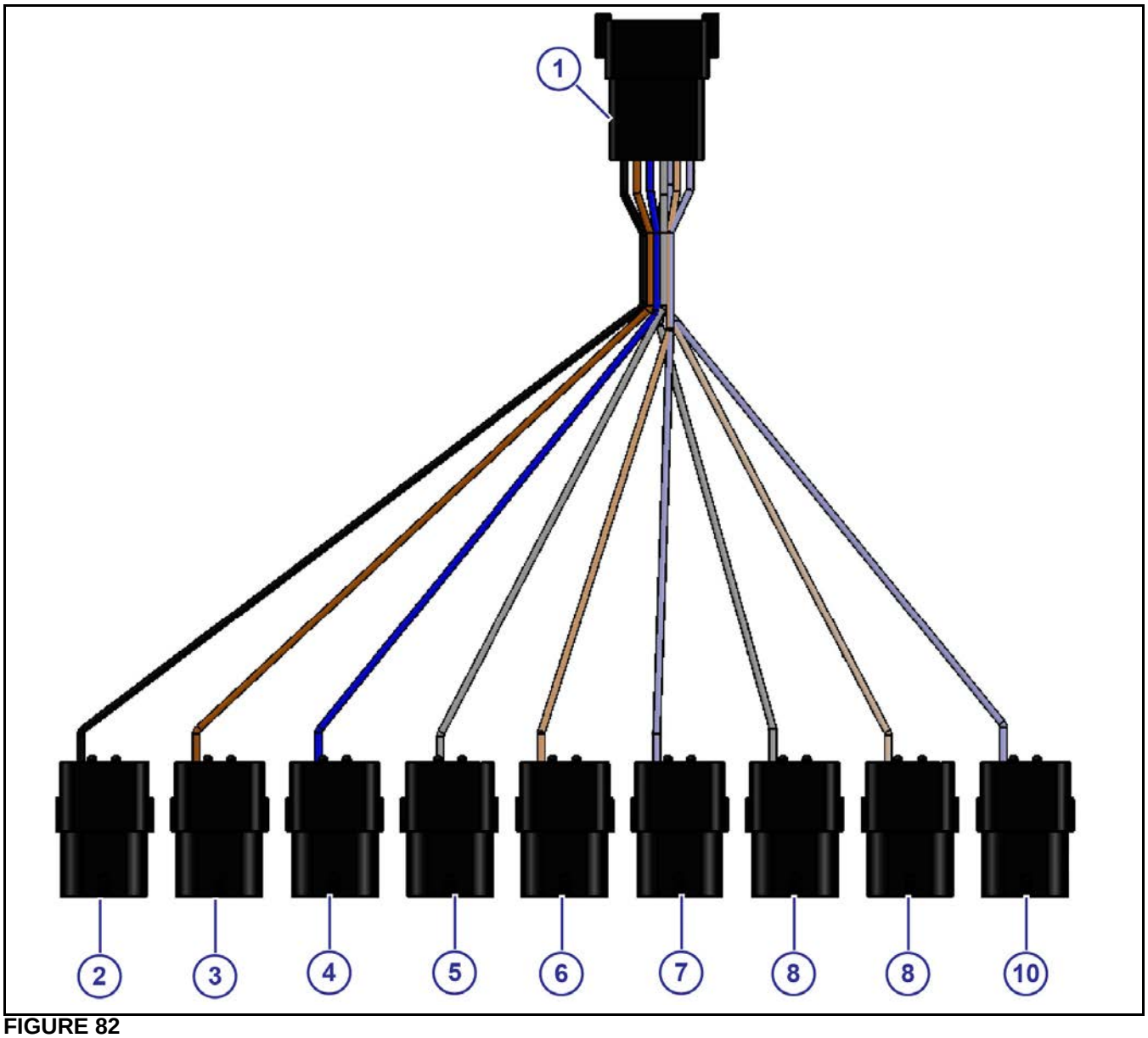

FIGURE 82
FIGURE 82:

(1) Connector to the Power Hub

PINOUT	COLOR		PINOUT	COLOR
1	Red		5	Green/White
2	Black		6	Violet
3	Gray		7	Red/White
4	Yellow		8	Orange

(2) Connector to the Boom Section 1 Wire

(3) Connector to the Boom Section 2 Wire

(4) Connector to the Boom Section 3 Wire

(5) Connector to the Boom Section 4 Wire

(6) Connector to the Boom Section 5 Wire

(7) Connector to the Boom Section 6 Wire

(8) Connector to the Boom Section 7 Wire

(9) Connector to the Boom Section 8 Wire

(10) Connector to the Boom Section 9 Wire

©2017 Capstan Ag Systems Inc. | SharpShooter™ with Rate Sync™ for Turf

10-Section/11-Nozzle Raven Envizio Boom - Jacobsen (P/N - 118602-120)

This boom shutoff harness is used for this kit:

- 118600-247

FIGURE 83
FIGURE 83:

(1) Connector to the Power Hub

PINOUT	COLOR		PINOUT	COLOR
1	Red		5	Green/White
2	Black		6	Violet
3	Gray		7	Red/White
4	Yellow		8	Orange

(2) Connector to the Boom Section Harness

3-Section/11-Nozzle Raven 440 Boom - Toro/FS Manufacturing (P/N - 118602-121 Rev. A)

This boom shutoff harness is used for this kit:

- 118600-236

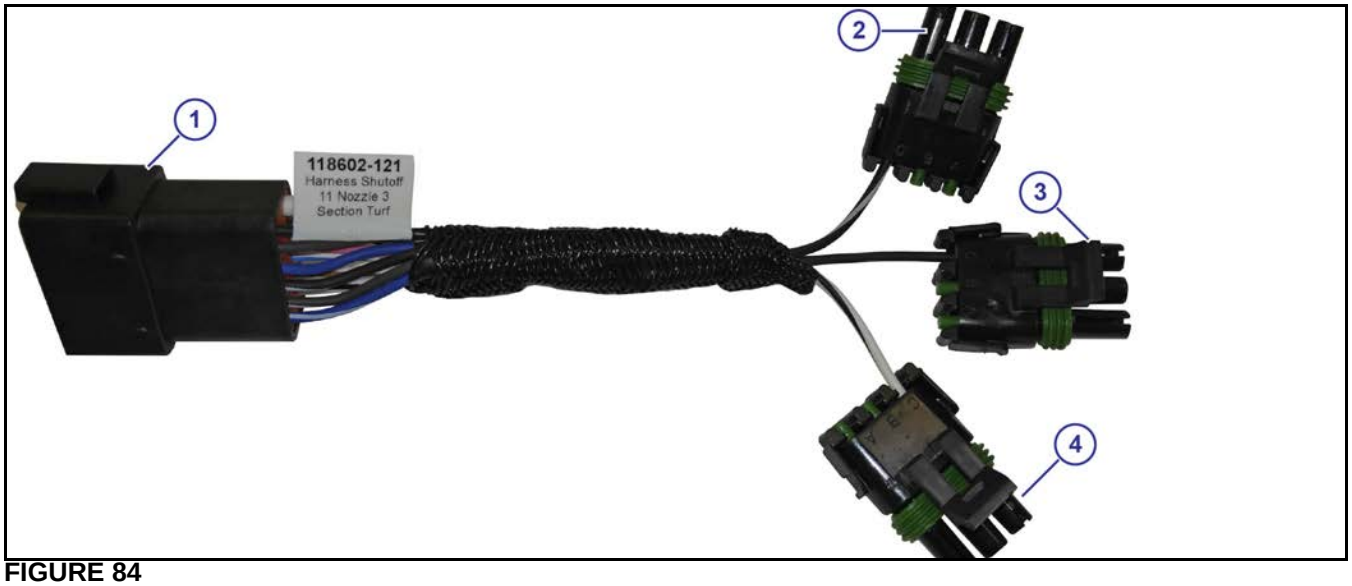

FIGURE 84
FIGURE 84:

(1) Connector to the Power Hub

PINOUT	COLOR		PINOUT	COLOR
1	Red		5	Green/White
2	Black		6	Violet
3	Gray		7	Red/White
4	Yellow		8	Orange

(2) Connector to the Boom Section 1 Wire

(3) Connector to the Boom Section 2 Wire

(4) Connector to the Boom Section 3 Wire

©2017 Capstan Ag Systems Inc. | SharpShooter™ with Rate Sync™ for Turf

3-Section/11-Nozzle Raven 440 Boom (Spade Terminals) SmithCo/John Deere - 2015 and before (P/N - 118602-124 Rev. A)

This boom shutoff harness is used for this kit:

- 118600-241

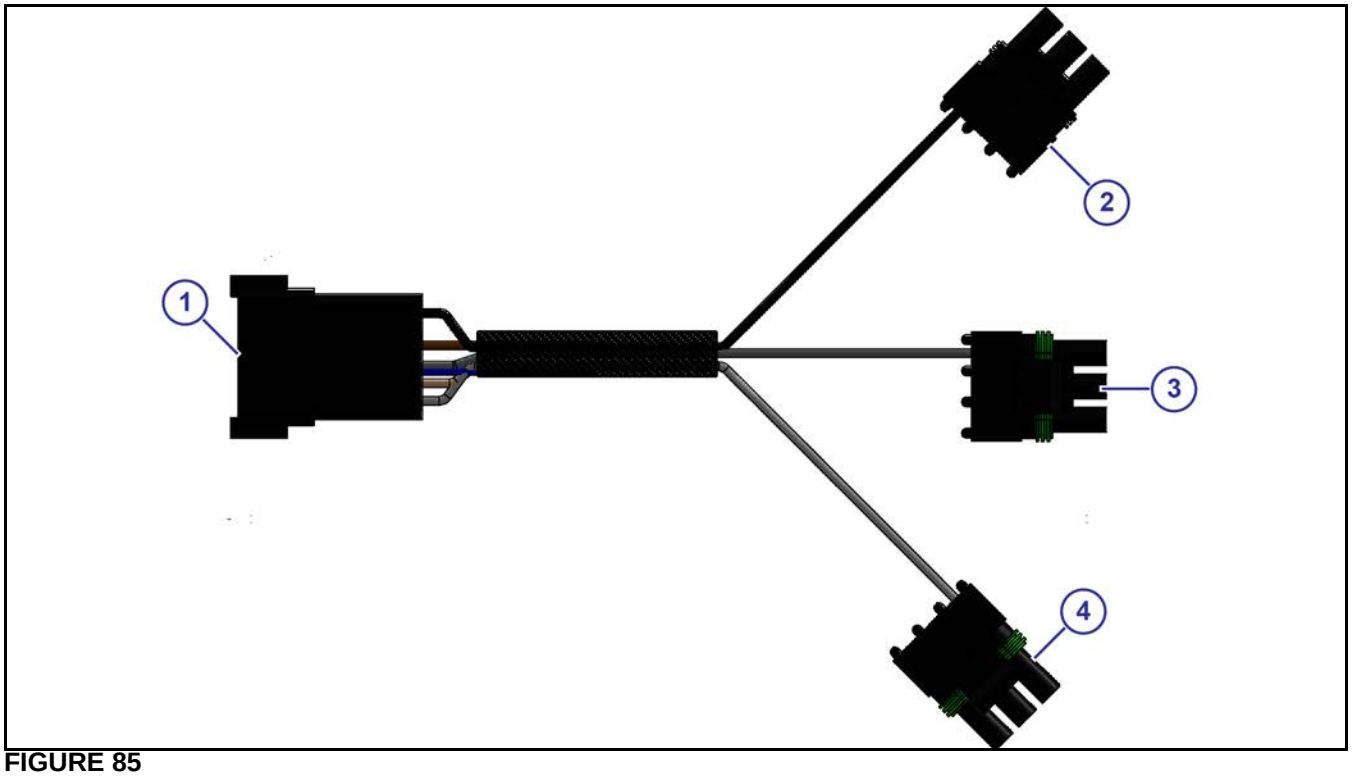

FIGURE 85
FIGURE 85:

(1) Connector to the Power Hub

PINOUT	COLOR		PINOUT	COLOR
1	Red		5	Green/White
2	Black		6	Violet
3	Gray		7	Red/White
4	Yellow		8	Orange

(2) Connector to the Boom Section 1 Wire

(3) Connector to the Boom Section 2 Wire

(4) Connector to the Boom Section 3 Wire

3-Section/11-Nozzle Raven 440 Boom - Jacobsen (P/N - 118602-121 Rev. B)

This boom shutoff harness is used for this kit:

- 118600-247
- 118600-200

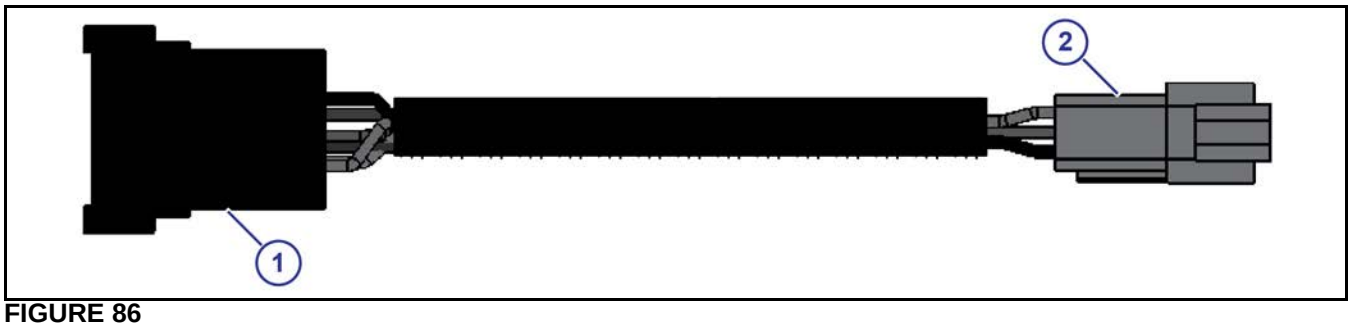

FIGURE 86
FIGURE 86:

(1) Connector to the Power Hub

(2) Connector to the Boom Section Harness

PINOUT	COLOR		PINOUT	COLOR
1	Red		5	Green/White
2	Black		6	Violet
3	Gray		7	Red/White
4	Yellow		8	Orange

10-Section/12-Nozzle Raven Envzio Boom - Jacobsen (P/N - 118602-122)

This boom shutoff harness is used for this kit:

- 118600-248

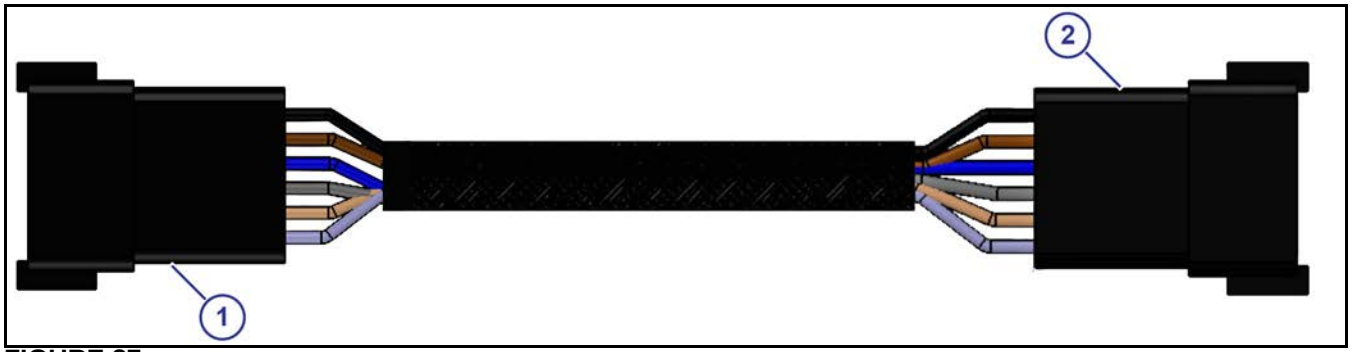

FIGURE 87
FIGURE 87:

(1) Connector to the Power Hub

(2) Connector to the Boom Section Harness

PINOUT	COLOR		PINOUT	COLOR
1	Red		5	Green/White
2	Black		6	Violet
3	Gray		7	Red/White
4	Yellow		8	Orange

©2017 Capstan Ag Systems Inc. | SharpShooter™ with Rate Sync™ for Turf

3-Section Raven 440; 12-Nozzle Boom - Jacobsen (P/N - 118602-123 Rev. B)

This boom shutoff harness is used for this kit:

- 118600-248
- 118600-201

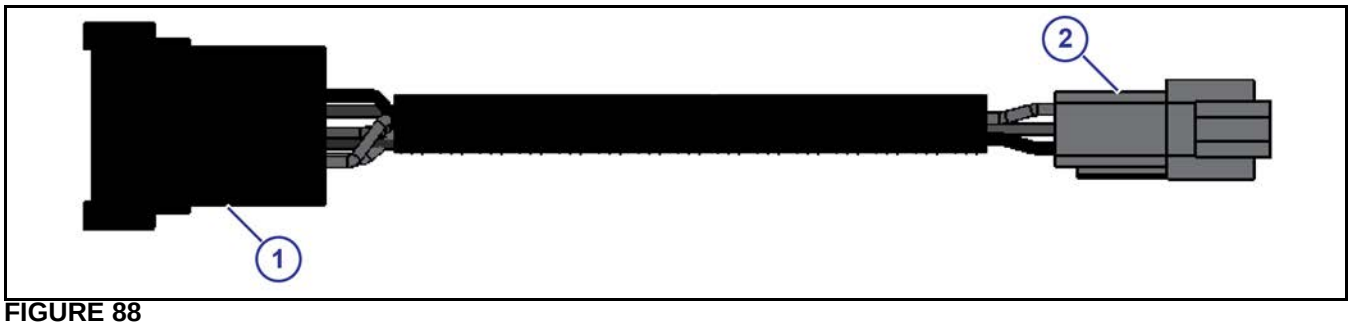

FIGURE 88
FIGURE 88:

(1) Connector to the Power Hub

PINOUT	COLOR		PINOUT	COLOR
1	Red		5	Green/White
2	Black		6	Violet
3	Gray		7	Red/White
4	Yellow		8	Orange

(2) Connector to the Boom Section Harness

3-Section/9-Nozzle Raven 440 Boom (Spade Terminals) SmithCo (P/N - 118602-125)

This boom shutoff harness is used for this kit:

- 118600-240

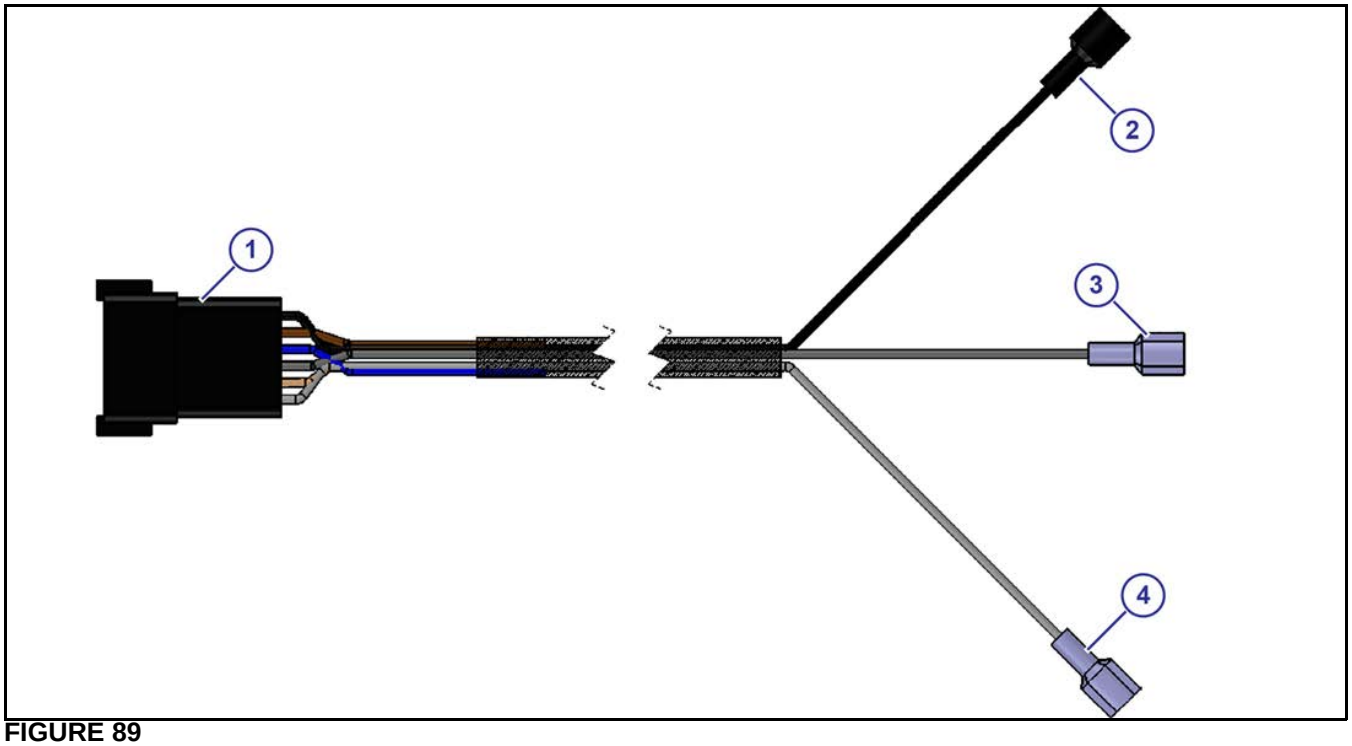

FIGURE 89
FIGURE 89:

(1) Connector to the Power Hub

PINOUT	COLOR		PINOUT	COLOR
1	Red		5	Green/White
2	Black		6	Violet
3	Gray		7	Red/White
4	Yellow		8	Orange

(2) Connector to the Boom Section 1 Wire

(3) Connector to the Boom Section 2 Wire

(4) Connector to the Boom Section 3 Wire

©2017 Capstan Ag Systems Inc. | SharpShooter™ with Rate Sync™ for Turf

3-Section/12-Nozzle Raven 440 Boom (Spade Terminals) SmithCo (P/N - 118602-126)

This boom shutoff harness is used for this kit:

- 118600-242

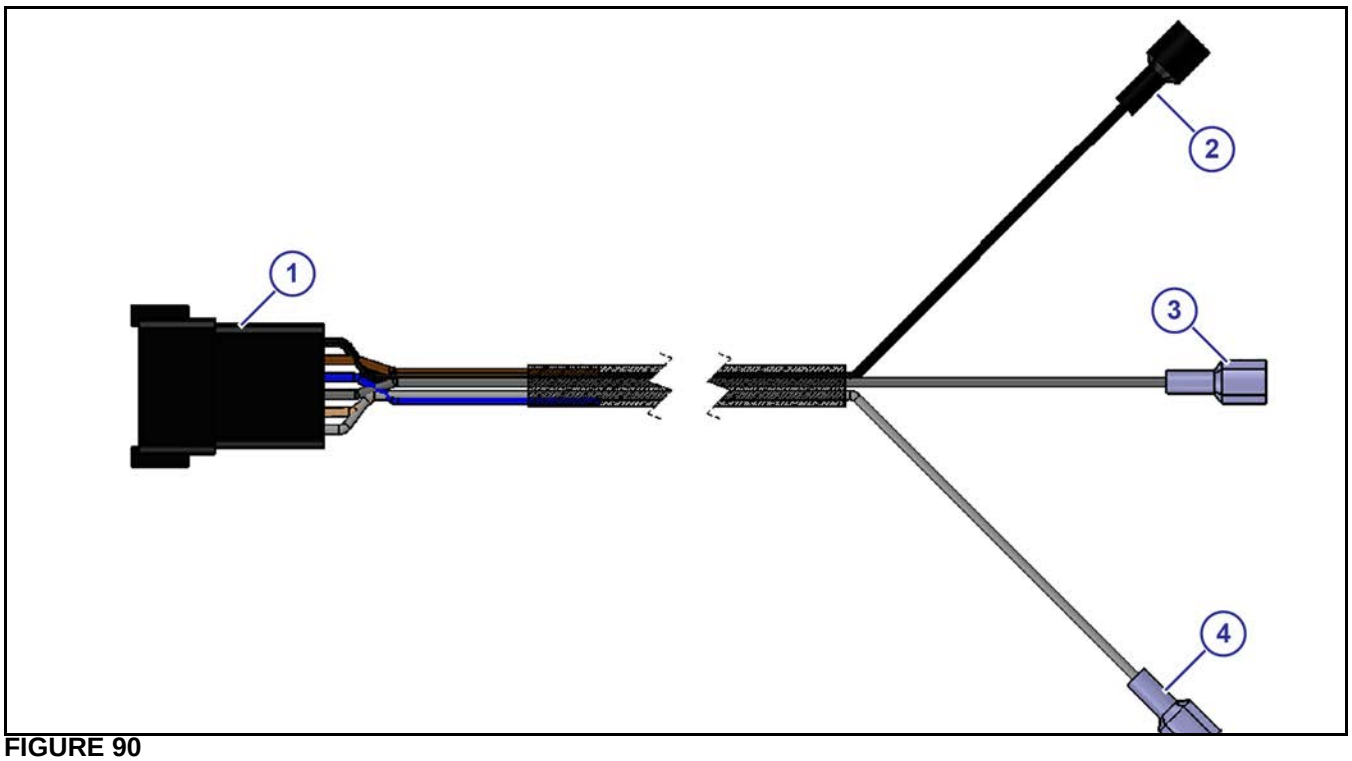

FIGURE 90
FIGURE 90:

(1) Connector to the Power Hub

PINOUT	COLOR		PINOUT	COLOR
1	Red		5	Green/White
2	Black		6	Violet
3	Gray		7	Red/White
4	Yellow		8	Orange

(2) Connector to the Boom Section 1 Wire

(3) Connector to the Boom Section 2 Wire

(4) Connector to the Boom Section 3 Wire

PRESSURE SENSOR EXTENSION HARNESS

Pressure Sensor Extension Harness (P/N 118600-108)

This pressure sensor extension harness is used for this kit:

- 118600-206
- 118600-207
- 118600-208
- 118600-225
- 118600-226
- 118600-227
- 118600-228
- 118600-229
- 118600-230

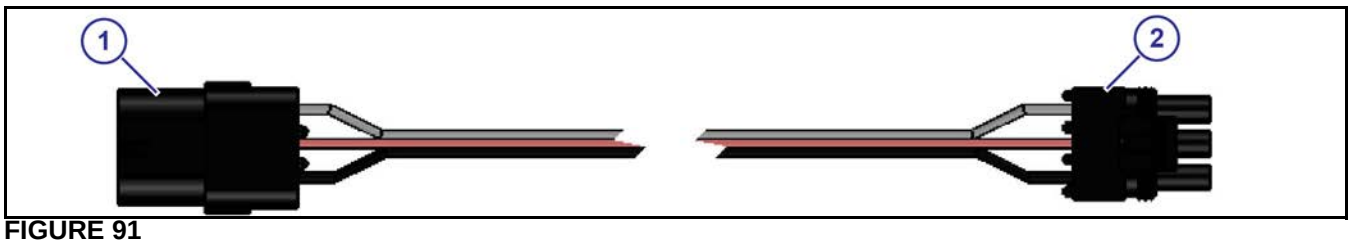

FIGURE 91
FIGURE 91:

(1) Connector to the Power Hub

PINOUT	COLOR		PINOUT	COLOR
1	Red		5	Green/White
2	Black		6	Violet
3	Gray		7	Red/White
4	Yellow		8	Orange

(2) Connector to the Pressure Sensor

©2017 Capstan Ag Systems Inc. | SharpShooter™ with Rate Sync™ for Turf

Pressure Sensor Extension Harness P/N 620202-023

This pressure sensor extension harness is used for this kit:

- 118600-236
- 118600-237

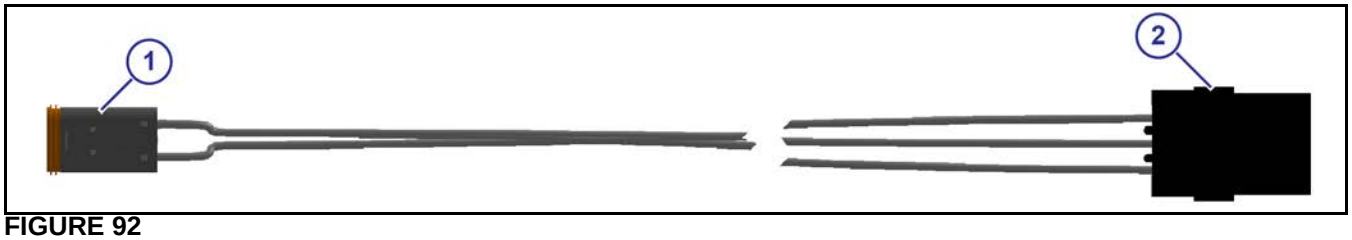

FIGURE 92
FIGURE 92:

(1) Connector to the Power Hub

(2) Connector to the Pressure Sensor

PINOUT	COLOR		PINOUT	COLOR
1	Red		5	Green/White
2	Black		6	Violet
3	Gray		7	Red/White
4	Yellow		8	Orange

PRESSURE SENSOR

100 psi Pressure Sensor - P/N 116301-001

This pressure sensor is used for this kit:

- 118600-200
- 118600-206
- 118600-201
- 118600-202
- 118600-207
- 118600-208
- 118600-225
- 118600-226
- 118600-227
- 118600-228
- 118600-229
- 118600-230
- 118600-235

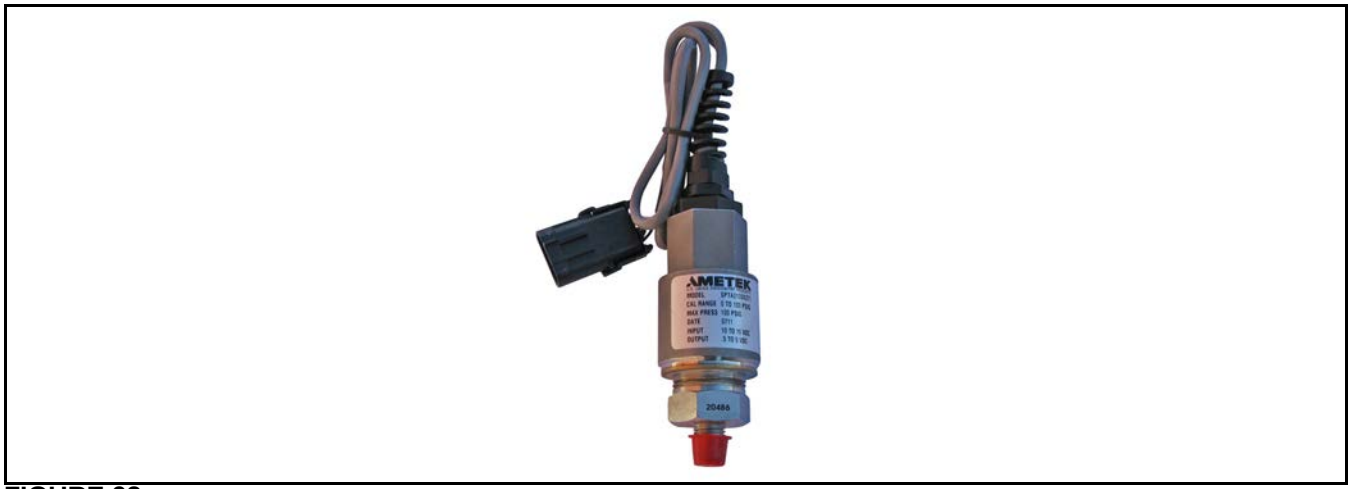

FIGURE 93
FIGURE 93:

100 psi Pressure Sensor Gems - P/N 116301-010

This pressure sensor is used for this kit:

- 118600-236
- 118600-237

FIGURE 94
FIGURE 94:

©2017 Capstan Ag Systems Inc. | SharpShooter™ with Rate Sync™ for Turf

INSTALLATION AND SETUP

PARTS IDENTIFICATION

Display

FIGURE 95: The display (1) is located at the operator station.

The back of the display has these connections:

(2) Power Connector

(3) GPS Port

(4) AUX (Diagnostics) Port

FIGURE 95

Display Extension Harness

FIGURE 96: The display extension harness connects the display to the power hub.

PART NUMBER	DESCRIPTION
118600-110	14 ft Extension Harness - SmithCo/Toro
118600-106	18 ft Extension Harness - Jacobsen

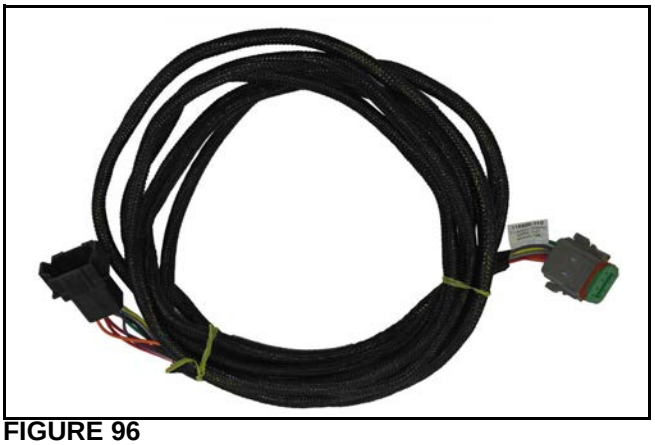

FIGURE 96

Boost (Two Solenoids) Nozzle Power Hub

FIGURE 97: The power hub is usually located at the center of the boom mast.

The power hub is a junction block where the battery power is routed to the valve drivers. The power hub also routes the pressure sensor signals and valve driver signals to the display.

PART NUMBER	DESCRIPTION
118600-250	9-Nozzle Power Hub - 15 ft
118600-253	11-Nozzle Power Hub - 18 ft
118600-256	12-Nozzle Power Hub - 20 ft
118600-101	13-Nozzle Power Hub - Universal

FIGURE 97

FIGURE 98: These power hubs were replaced in 2015:

PART NUMBER	DESCRIPTION
118600-104	9-Nozzle Power Hub - SmithCo
118600-105	11-Nozzle Power Hub - Universal
118600-103	12-Nozzle Power Hub - SmithCo

IMPORTANT: *Left and right boom harnesses, pressure sensor extensions, a power extension, and a display extension are required if replacing the older style power hubs.*

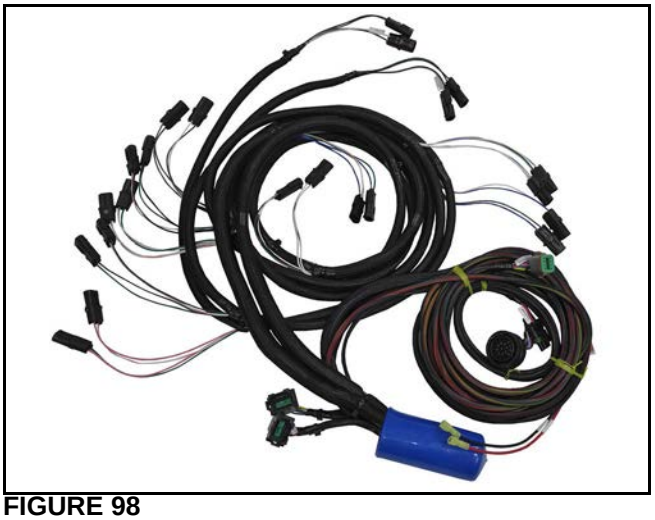

FIGURE 98

©2017 Capstan Ag Systems Inc. | SharpShooter™ with Rate Sync™ for Turf

No Boost (One Solenoid) Nozzle Power Hub

FIGURE 99: The power hub is usually located at the center of the boom mast.

The power hub is a junction block where the battery power is routed to the valve drivers. The power hub also routes the pressure sensor signals and valve driver signals to the display.

PART NUMBER	DESCRIPTION
118600-260	9 nozzle Power Hub - 15 ft - No Boost
118600-263	11 nozzle Power Hub - 18 ft - No Boost
118600-266	12 nozzle Power Hub - 20 ft - No Boost
118600-270	5-Section/17 nozzle Power Hub - No Boost
118600-273	3-Section/13 nozzle Power Hub - No Boost

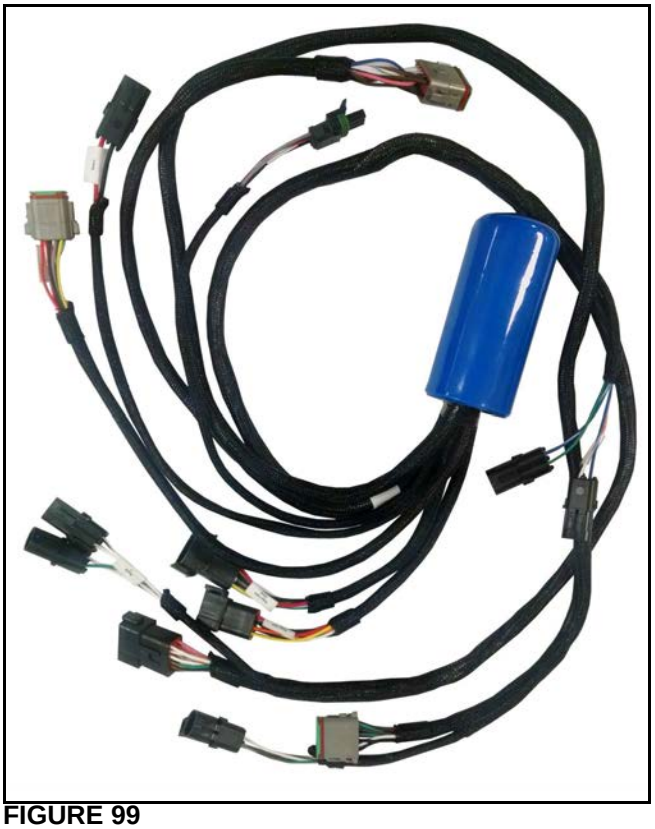

FIGURE 99

Left Boom Harness - Boost

FIGURE 100: The left boom harness from the power hub.

IMPORTANT: The left boom harness is not needed for the universal 13-nozzle power hub (118600-101).

PART NUMBER	DESCRIPTION
118600-251	3 or 9-Section/9-Nozzle Left Boom Harness (Nozzles 1 to 3) - 15 ft
118600-254	3 or 10-Section/11-Nozzle Left Boom Harness (Nozzles 1 to 4) - 18 ft
118600-257	3 or 10-Section/12-Nozzle Left Boom Harness (Nozzles 1 to 4) - 20 ft

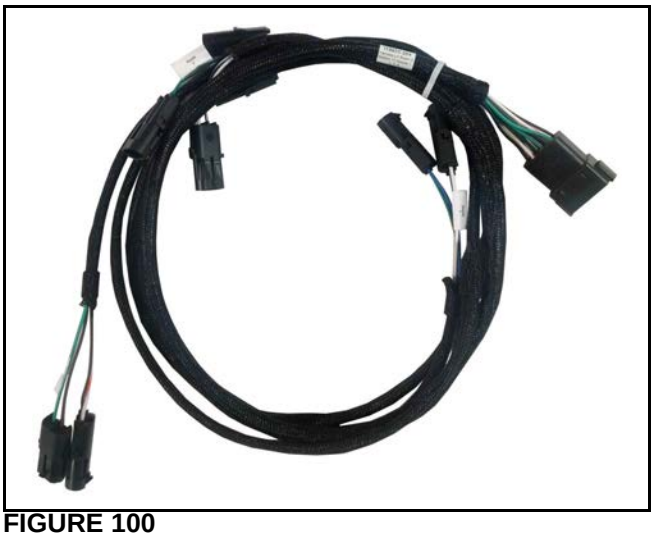

FIGURE 100

Left Boom Harness - No Boost

FIGURE 101: The left boom harness from the power hub.

PART NUMBER	DESCRIPTION
118600-261	3 or 9-Section/9-Nozzle Left Boom Harness (Nozzles 1 to 3) - 15 ft - No Boost
118600-264	3 or 10-Section/11-Nozzle Left Boom Harness (Nozzles 1 to 4) - 18 ft - No Boost
118600-267	3 or 10-Section/12-Nozzle Left Boom Harness (Nozzles 1 to 4) - 20 ft - No Boost
118600-271	5-Section/17-Nozzle Left Boom Harness (Nozzles 1 to 7) - No Boost
118600-274	3-Section/13-Nozzle Left Boom Harness - No Boost

FIGURE 101

Right Boom Harness - Boost

FIGURE 102: The right boom harness from the power hub.

IMPORTANT: The left boom harness is not needed for the universal 13-nozzle power hub (118600-101).

PART NUMBER	DESCRIPTION
118600-252	3 or 9-Section/9-Nozzle Right Boom Harness (Nozzles 7 to 9) - 15 ft
118600-255	3 or 10-Section/11-Nozzle Right Boom Harness (Nozzles 8 to 11) - 18 ft
118600-258	3 or 10-Section/12-Nozzle Right Boom Harness (Nozzles 9 to 12) - 20 ft

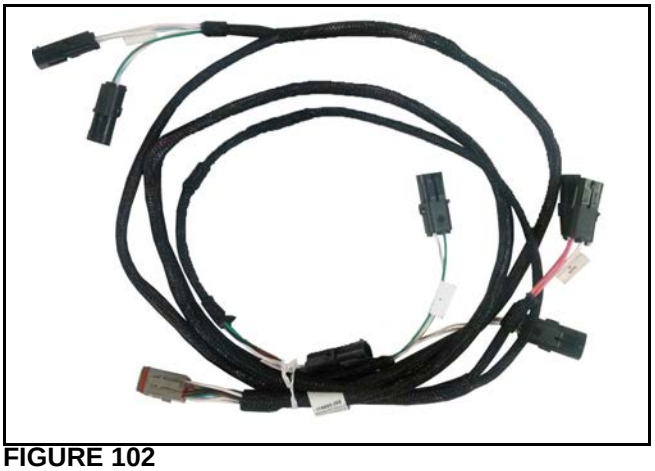

FIGURE 102

Right Boom Harness - No Boost

FIGURE 103: The right boom harness from the power hub

PART NUMBER	DESCRIPTION
118600-262	3 or 9-Section/9-Nozzle Right Boom Harness (Nozzles 7 to 9) - 15 ft - No Boost
118600-265	3 or 10-Section/11-Nozzle Right Boom Harness (Nozzles 8 to 11) - 18 ft - No Boost
118600-268	3 or 10-Section/12-Nozzle Right Boom Harness (Nozzles 9 to 12) - 20 ft - No Boost
118600-272	5-Section/17-Nozzle Left Boom Harness (Nozzles 11 to 17) - No Boost
118600-275	3-Section/13-Nozzle Right Boom Harness - No Boost

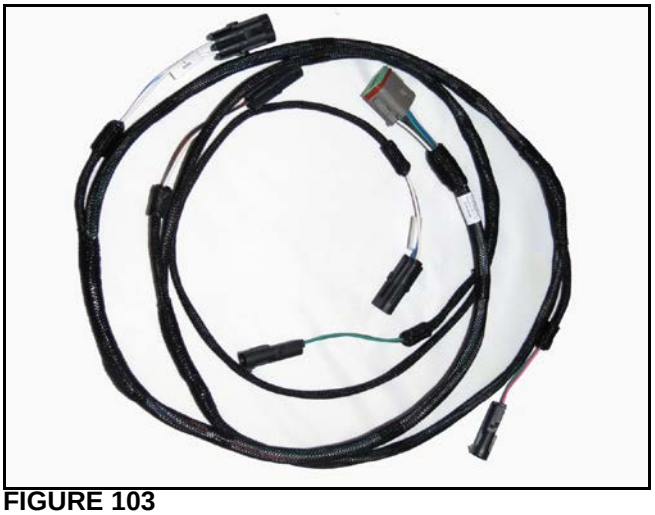

FIGURE 103

©2017 Capstan Ag Systems Inc. | SharpShooter™ with Rate Sync™ for Turf

Valve Driver Module

FIGURE 104: The valve driver modules (1) are usually located next to the power hub.

For Boost, two valve driver modules are required. One for boost row nozzles and one for the non-boosted nozzles.

For No Boost, one valve driver is required.

Each valve driver has a single connector that connects to the power hub. Each valve driver has a 10 A fuse (2).

PART NUMBER	DESCRIPTION
118400-020	Turf Valve Driver Module - 8-Pin DT

NOTE: *Early production used 118400-101.*

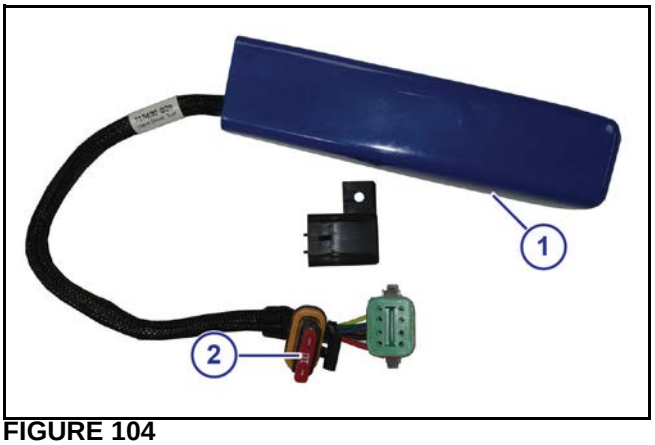

FIGURE 104

Pressure Sensor

FIGURE 105: On most models the pressure sensor is located near the center section of the rear boom.

On SmithCo models the pressure sensor is located at the machine center behind the seat.

IMPORTANT: *The pressure sensor must be installed in a vertical upright position. it should be located so product flow aways flows past it to avoid plugging. It must also be installed at a location that will allow an accurate reading when all, or only one boom section is turned on.*

The pressure sensor provides pressure signals to the display.

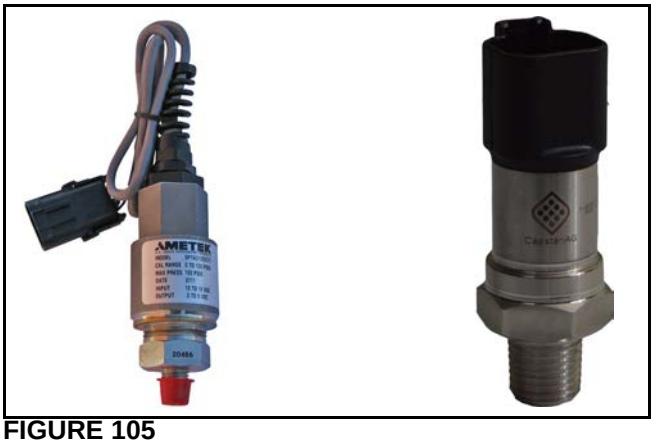

FIGURE 105

Pressure Sensor Extension Harness (if equipped)

FIGURE 106: The pressure sensor extension harness connects the pressure sensor to the power hub.

IMPORTANT: *The pressure sensor extension harness is only used on SmithCo sprayers.*

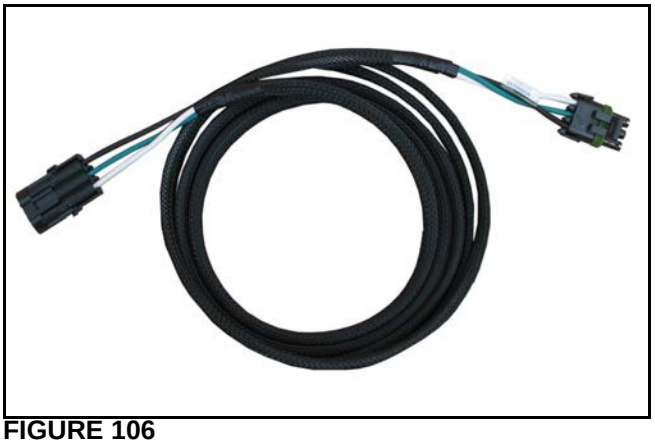

FIGURE 106

Power Harness

FIGURE 107: The power harness connects the power hub to the battery.

ITEM NUMBER	PART NUMBER	DESCRIPTION
1	118600-107	Power Harness - 14 ft for SmithCo/Toro
2	118600-109	Power Harness - 18 ft for Jacobsen (with 5A fuse)

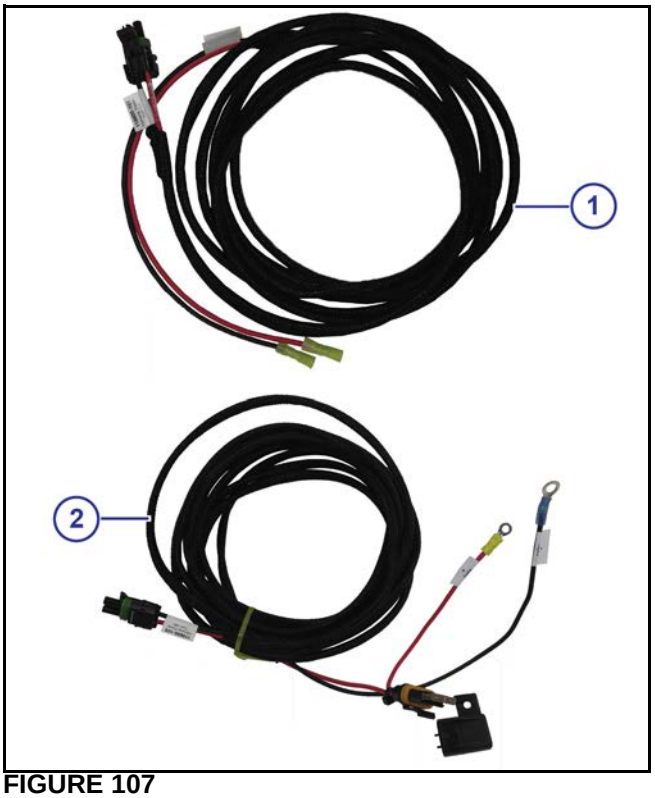

FIGURE 107

©2017 Capstan Ag Systems Inc. | SharpShooter™ with Rate Sync™ for Turf

Boom Shutoff Adapter Harness

SharpShooter™ uses a signal to turn on and off the nozzle valve assemblies located on the boom nozzle bodies. These assemblies are located on the boom section spray tubes. When the signal wire is powered up, 12V, the nozzle valves open. When the signal wire has no power, the nozzle valves close.

The boom shutoff adapter intercepts the signals from the rate controller section signals that open and close the boom section shutoff valves. Typically the machine boom section shutoff on SmithCo machines are removed and the boom section adapter harness connects directly to the controller harness.

Several boom shutoff adapter harnesses are available depending on the sprayer model and boom configuration.

NOTE: *The boom shutoff adapter harness is not needed for the universal 13 nozzle power hub (118600-101).*

Applicable Shutoff Adapter Service Parts Include:

9 AND 10 SECTION CONFIGURATIONS		
PART NUMBER	**OEM**	**DESCRIPTION**
118602-129	SmithCo/Toro	9-Section/9-Nozzle Raven Envizio Boom
118602-118	Jacobsen	
118602-127	SmithCo/Toro	10-Section/11-Nozzle Raven Envizio Boom
118602-120	Jacobsen	
118602-111	John Deere	10-Section/11-Nozzle Boom
118602-128	SmithCo/Toro	10-Section/12-Nozzle Raven Envzio Boom
118602-122	Jacobsen	
118602-110	John Deere	10-Section/13-Nozzle Boom

3 SECTION CONFIGURATIONS		
PART NUMBER	**OEM**	**DESCRIPTION**
118602-125	SmithCo/Toro	3-Section/9-Nozzle Raven 440 Boom (spade terminals)
118602-119	Jacobsen	3-Section/9-Nozzle Raven 440 Boom
118602-124 Rev A	SmithCo/Toro/John Deere - 2015 and before	3-Section/11-Nozzle Raven 440 Boom (spade terminals)
118602-124 Rev B	SmithCo/Toro/John Deere - 2016 and after	3-Section/11-Nozzle Raven 440 Boom (spade terminals)
118602-121	Jacobsen	3-Section/11-Nozzle Raven 440 Boom
118602-104	John Deere	3-Section/11-Nozzle Boom
118602-126	SmithCo/Toro	3-Section/12-Nozzle Raven 440 Boom (spade terminals)
118602-103		3-Section/13-Nozzle
118602-123 Rev B	Jacobsen	3-Section Raven 440; 12-Nozzle Boom

5 SECTION CONFIGURATIONS		
PART NUMBER	**OEM**	**DESCRIPTION**
118602-105	Specialty Enterprise Booms	5-Section/17-Nozzle Boom - No Boost

FIGURE 108: This style of boom shutoff adapter harness has a large round connector that is used with older power hubs. These power hubs to not have separate boom and power harnesses.

PART NUMBER	DESCRIPTION
118600-104	9-Nozzle Power Hub - SmithCo
118600-105	Universal 11-Nozzle Power Hub
118600-103	12-Nozzle Power Hub - SmithCo
118600-101	Universal 13-Nozzle Power Hub - 21 ft

To replace this style of boom shutoff adapter these parts are necessary:

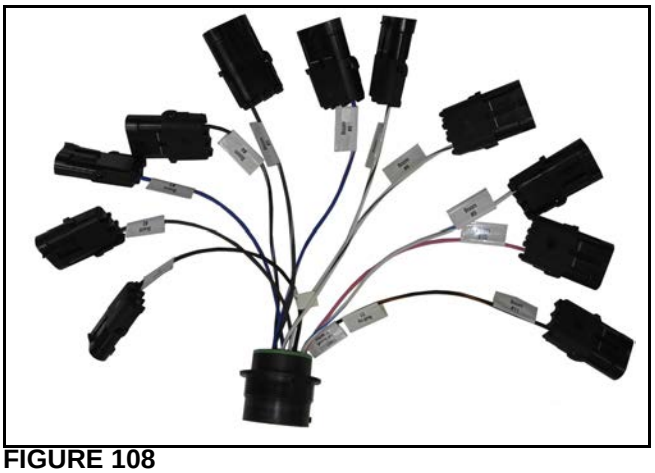

FIGURE 108

10 SECTION CONFIGURATION	
PART NUMBER	**DESCRIPTION**
118602-111	10-section/11-nozzle Raven Envizio Boom (Packard Weather-pack Terminals)
118602-112	10-section/12-nozzle Raven Envizio Boom (Packard Weather-pack Terminals)
118602-110	10-section/13-nozzle Raven Envizio;boom (Packard Weather-pack Terminals)

3 SECTION CONFIGURATION	
PART NUMBER	**DESCRIPTION**
118602-117	3-Section/9-Nozzle Raven 440 Boom (Spade Terminals)
118602-115	3-Section/11-Nozzle Raven 440 Boom (Spade Terminals)
118602-104	3-Section/11-Nozzle Raven 440 Boom (Packard Weather-pack Terminals)
118602-116	3-Section/12-Nozzle Raven 440 Boom (Spade Terminals)
118602-103	3-Section/13-Nozzle Raven 440 Boom (Packard Weather-pack Terminals)

Y-Adapter Harness

FIGURE 109: The Y-adapter harness connects to the boom shutoff adapter harness and allows two nozzle locations to be a single section.

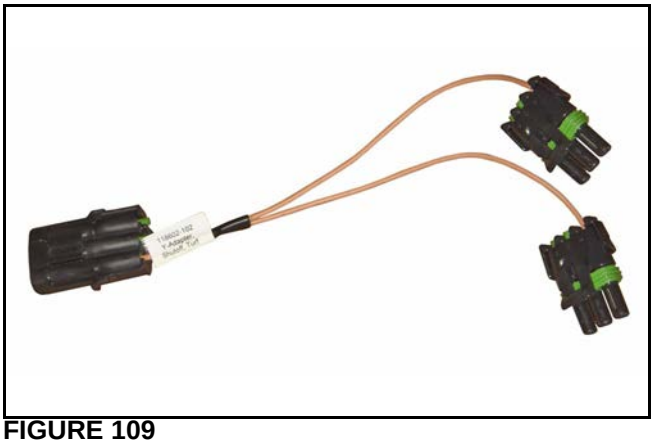

FIGURE 109

©2017 Capstan Ag Systems Inc. | SharpShooter™ with Rate Sync™ for Turf

Battery Power Cable

FIGURE 110: The battery power cable (Envizio Pro) is required for after-market installations of advanced rated controllers. This 30A fused harness connects the battery to an after-market switch that controls an after-market fuse panel for the rate controller power and ground wires.

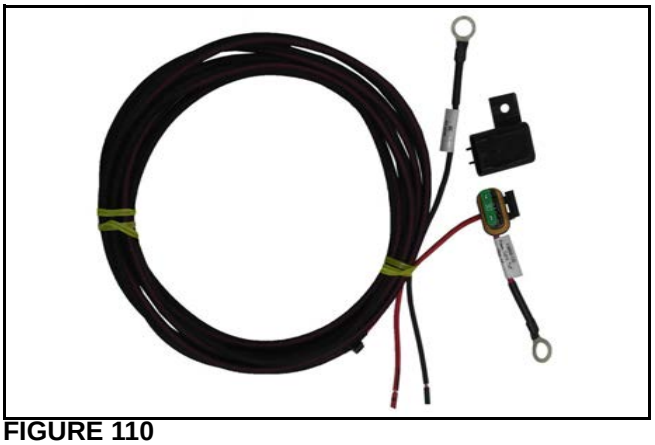

FIGURE 110

Dust Plugs

FIGURE 111: The Packard 2-pin tower (1) and 2-pin shroud (2) may be used as plugs to weatherproof any unused connectors or for modifying the pump PWM valve signal wire to the rate controller harness.

ITEM NUMBER	PART NUMBER	DESCRIPTION
1	706500-502	Dust Plug 2-Pin Tower
2	706510-502	Dust Plug 2-Pin Shroud

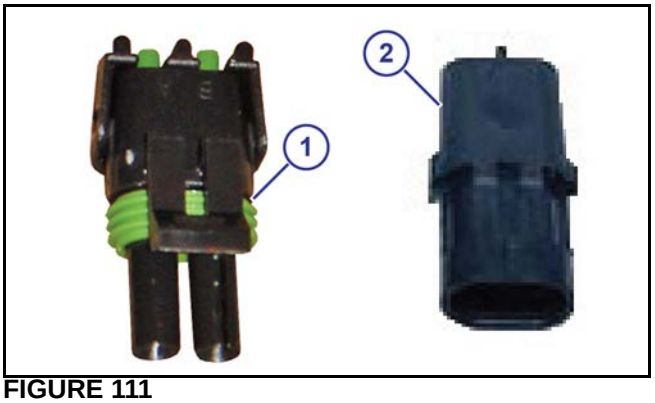

FIGURE 111

Nozzle Valve Assembly

FIGURE 112: The SharpShooter™ pulses the nozzle valve assembly to maintain a constant boom and tip pressure.

The nozzle valve assembly (1) screws onto the nozzle body (2) to replace the standard diaphragm check valve. The 2-pin Packard connector connects the into boom harness to the power hub.

The SharpShooter™ with Rate Sync™ for Turf system has one of these nozzle valve assemblies:

PART NUMBER	DESCRIPTION
116390-111	7 W Nozzle Valve Assembly
116390-112	12 W Nozzle Valve Assembly

IMPORTANT: *The nozzle valve assembly requires a Wilger brand nozzle body. Do not replace broken nozzle bodies with a brand other than Wilger as significant leaking will occur.*

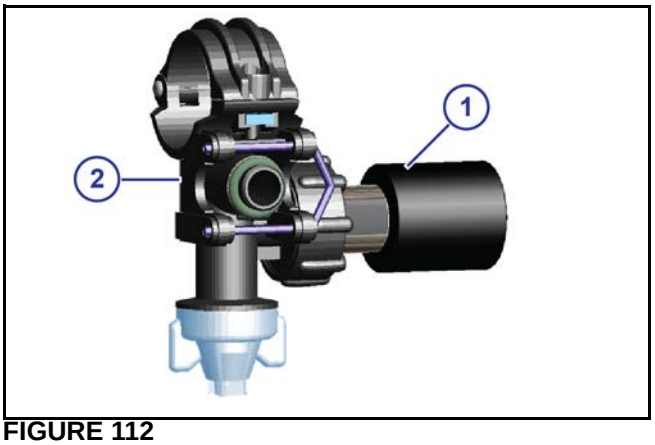

FIGURE 112

7 W Coil Assembly

FIGURE 113: 116390-111

ITEM NUMBER	PART NUMBER	DESCRIPTION
1	116189-111	Coil Assembly
2	716009-111	Plunger (Standard - 2-Slot)
3	715022-204	O-ring - Size-015 (Brown)
4	717101-007	Fly nut
5	116188-111	Valve Body with Grip - W15
6	715022-201	O-ring - Size-008 (Black)
7	715022-206	O-ring - Size-016 (Brown)

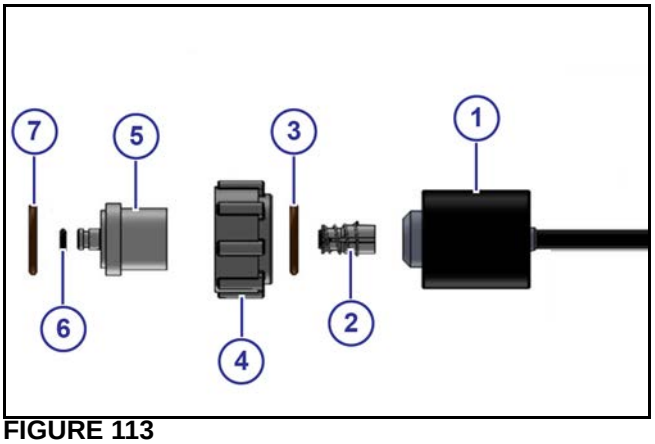

FIGURE 113

12 W Coil Assembly

FIGURE 114: 116390-112

ITEM NUMBER	PART NUMBER	DESCRIPTION
1	625147-001	Coil Assembly
2	716009-111	Plunger (Standard - 2-Slot)
3	715022-204	O-ring - Size-015 (Brown)
4	717101-007	Fly nut
5	116188-112	5/32 Orifice Valve Body - W24
6	715022-201	O-ring - Size-008 (Black)
796	715022-206	O-ring - Size-016 (Brown)

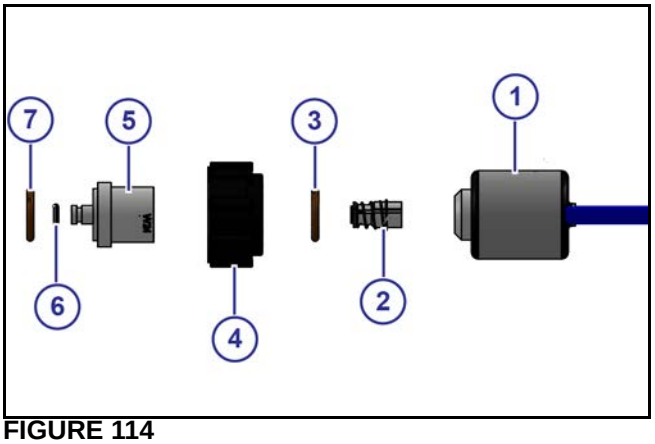

FIGURE 114

©2017 Capstan Ag Systems Inc. | SharpShooter™ with Rate Sync™ for Turf

Tips

FIGURE 115: CapstanAG offers Wilger pre-orifice drift reduction tips.

These tips have the same inlet orifice that determines the maximum flow. But the two tips have different exit orifices to allow a broader droplet spectrum.

BOOST TIPS	
PART NUMBER	**DESCRIPTION**
SR110-10	Inside Nozzle Bodies For Application Rates More Than 1.0 gal/1000 sq ft
SR110-006	Inside Nozzle Bodies For Application Rates Less Than 1.0 gal/1000 sq ft
MR110-10	Outer Nozzle Bodies For Application Rates Less Than 2.0 gal/1000 sq ft
MR110-125	Outer Nozzle Bodies For Application Rates More Than 2.0 gal/1000 sq ft

For single solenoid/non boost sprayers, depending on the top spraying speed desired, CapstanAG offers:

NO BOOST TIPS	
PART NUMBER	**DESCRIPTION**
ER110-20	Inside Nozzle Bodies For Application Rates More Than 1.0 gal/1000 sq ft - No Boost
SR110-06	Outer Nozzle Bodies For Application Rates Less Than 1.0 gal/1000 sq ft - No Boost

NOTE: *Other tips are available through your CapstanAG or Wilger dealer.*

FIGURE 115

Wilger Nozzle Bodies

FIGURE 116: Nozzle bodies for Boost:

BOOST NOZZLE BODIES	
PART NUMBER	**DESCRIPTION**
132017-001	C/R II Saddle/Body 1 inch Pipe and 3/8 Inlet
132002-001	C/R II End Nozzle Body

FIGURE 116

FIGURE 117: No boost nozzle bodies:

NO BOOST NOZZLE BODIES	
PART NUMBER	**DESCRIPTION**
132017-001	C/R II Saddle/Body 1 in Pipe and 3/8 Inlet
132007-002	CJ Duel Body Adapter, Radial Lock
132015-003	Plug

FIGURE 117

FIGURE 118: For the Specialty Enterprise long booms (5-Section):

NO BOOST NOZZLE BODIES	
PART NUMBER	**DESCRIPTION**
123016-038	C/R 1/2 inch pipe and 3/8 inlet
132016-010	C/RII 3-way turret

FIGURE 118

©2017 Capstan Ag Systems Inc. | SharpShooter™ with Rate Sync™ for Turf

Hypro Dry Boom Adapters

FIGURE 119:

ITEM NUMBER	PART NUMBER	DESCRIPTION
1	132025-001	Single Dry Boom Adapter 1 x 3/4
2	132026-001	Dry Boom Adapter

FIGURE 119

Pressure Sensor Breakout Harness

FIGURE 120: The pressure sensor breakout harness is a service tool used to evaluate the pressure sensor.

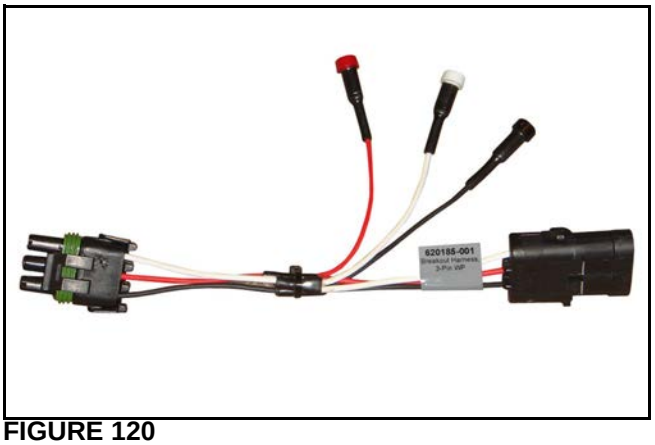

FIGURE 120

Original Equipment Manufacturer Kits

PART NUMBER	DESCRIPTION	OEM FACTORY INSTALLED	RETRO-FIT AFTER-MARKET CUSTOMIZATION
118600-230	9-Section/9-Nozzle Boom - 15 ft	SmithCo	
118600-226	10-Section/11-Nozzle Boom - 18 ft	SmithCo	
118600-228	3 or 10-Section/12 Nozzle Boom - 20 ft	SmithCo	
118600-208	3-Section/9-Nozzle Boom - 15 ft	SmithCo	
118600-206	3-Section/11-Nozzle Boom - 18 ft	SmithCo	
118600-207	3-Section/12-Nozzle Boom - 20 ft	SmithCo	
118600-201	3 or 10-Section/12 Nozzle Boom - 20 ft	Jacobsen	
118600-200	3 or 10-Section/11 Nozzle Boom - 18 ft	Jacobsen	
118600-247	3 or 10-Section/11 Nozzle Boom - No Boost	Jacobsen	
118600-248	3 or 10-Section/12 Nozzle Boom - No Boost	Jacobsen	
118600-245	9-Nozzle Boom - No Boost	SmithCo	
118600-243	11-Nozzle Boom - No Boost	SmithCo	
118600-244	12-Nozzle Boom - No Boost	SmithCo	
118600-240	3-Section/9-Nozzle Boom - No Boost	SmithCo	
118600-241	3-Section/11-Nozzle Boom - No Boost	SmithCo	
118600-242	3-Section/12-Nozzle Boom - No Boost	SmithCo	
118600-235	3-Section/9-Nozzle Boom - No Boost	FS Manufacturing	
118600-239	5-Section/17-Nozzle Boom - No Boost	Specialty Enterprises	Retrofit for ALL sprayers
118600-237	3-Section/13-Nozzle Boom - No Boost	FS Manufacturing	

Serviceable Parts

PART NUMBER	DESCRIPTION	RETRO-FIT AFTER-MARKET CUSTOMIZATION
716009-113	Standard Plunger (two slots around the plunger seal)	SmithCo, Jacobsen, John Deere/SDI
716009-111	High Flow Plunger (four slots around the plunger seal)	SmithCo, Jacobsen, John Deere/SDI
717101-007	Wilder Fly Nut	SmithCo, Jacobsen, John Deere/SDI
116188-111	Wilger Valve Body with Grip	SmithCo, Jacobsen, John Deere/SDI
715022-206	Wilger Viton O-Ring -116 (Between Body and Nozzle)	SmithCo, Jacobsen, John Deere/SDI
715022-204	Viton O-Ring, -015 (Between Coil and Body, All Valves)	SmithCo, Jacobsen, John Deere/SDI
715022-201	Viton O-Ring - 0.008 - Small	SmithCo, Jacobsen, John Deere/SDI
116189-111	Coil Assembly - 7-Watt	SmithCo, Jacobsen, John Deere/SDI
625147-001	Coil Assembly - 12 Watt	SmithCo, Jacobsen, John Deere/SDI
116188-112	5/32 Orifice Valve Body - W24	SmithCo, Jacobsen, John Deere/SDI
132020-001	Wilger Boom Clamp - High Reach C/R II 3/4 in x 1 1/4 in	Old Toro, John Deere Models

©2017 Capstan Ag Systems Inc. | SharpShooter™ with Rate Sync™ for Turf

PART NUMBER	DESCRIPTION	RETRO-FIT AFTER-MARKET CUSTOMIZATION
132009-006	Combojet Tip - SR110-06 (replaces 132009-001 for low rates)	SmithCo, Jacobsen, John Deere/SDI
132030-001	Combojet Tip - MR110-125 (order with 132029-001)	SmithCo, Jacobsen, John Deere/SDI
132009-001	Combojet Tip - SR110-10 (order with 132010-001)	SmithCo, Jacobsen, John Deere/SDI
132010-001	Combojet Tip - MR110-10 (order with 132009-001)	SmithCo, Jacobsen, John Deere/SDI
132011-020	Combojet Tip - ER110-20 (order with 132009-001)	SmithCo, Jacobsen, John Deere/SDI

DISPLAY SOFTWARE

The display must have software version 1.0.27 or after to correctly use the liquid level sensor.

Contact a CapstanAG representative to install the correct software version onto the cab box.

A CapstanAG representative will need these items to install the correct software onto the cab box.

PART NUMBER	DESCRIPTION
	CapstanAG CAN Commander
120050-002	Translator Box and USB Cable
120056-001	Programming Cable

Update Cab Box Software

FIGURE 121:

1. Press the **POWER** button on the display.
2. Connect the translator and the programming cable to the cab box and a computer.
3. On the computer, open the **CAN Commander** program.
4. Select **Cancel** on the window that opens.

   The window will close and the CAN Commander software will open.

FIGURE 121

FIGURE 122:

5. Click on the **Software Upload** tab (1).
6. Click on the circle next to **SSQ/Cab Box (2)**.
7. Click **Locate Network Devices** (3).

   Hardware that is available will show in the list.

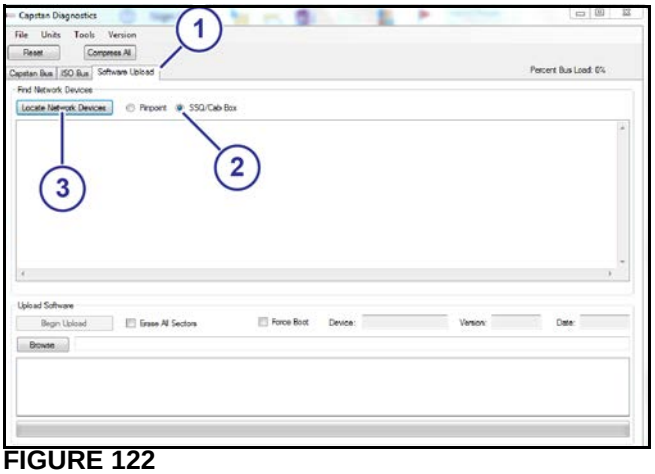

FIGURE 122

©2017 Capstan Ag Systems Inc. | SharpShooter™ with Rate Sync™ for Turf

FIGURE 123:

8. Click on the box (1) next to **Erase All Sectors**.

   Make sure that there is a check mark in the box.

9. Click **Browse (2)**.
10. Find and select the desired code to upload.
11. Click **Open**.

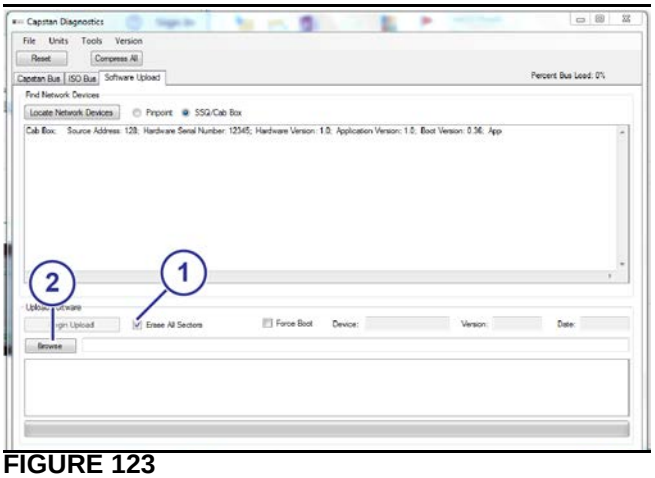

FIGURE 123

FIGURE 124:

12. Click on the hardware information (1).

    The hardware information must be selected and highlighted to begin upload.

13. Click **Begin Upload** (2).

IMPORTANT: *The display will turn off when the upload is complete.*

14. Disconnect the programming cable and translator.
15. Press the **POWER** button on the display.

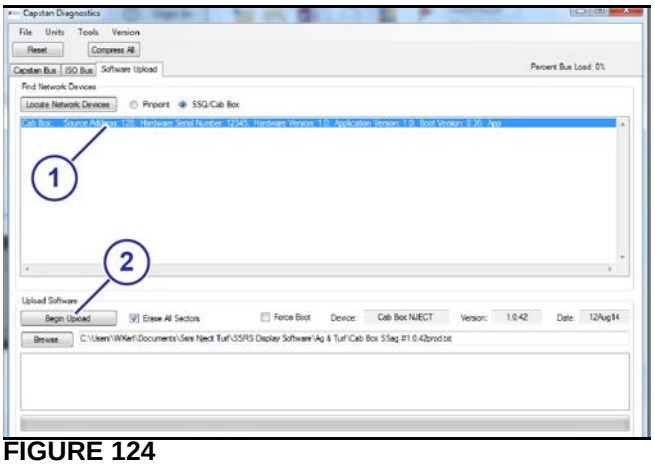

FIGURE 124

NOTES

©2017 Capstan Ag Systems Inc. | SharpShooter™ with Rate Sync™ for Turf

INDEX

B

Battery Power Cable 95
Battery Safety 2
Boom Shutoff Adapter Harness 93
Boom Shutoff Harness 68
Boost (Two Solenoids) Nozzle Power Hub 88

C

Cab Display 6
Check the Battery Voltage 36
Check the Power to the Pressure Sensor Input 40
Check the System Load Capacity 36
Chemical Safety 2
Clean the Nozzle Valve(s) 34
Clean the Spray System 17
Coil Test 35
Component Testing 33
  Nozzle Valves 33

D

Display 66, 87
Display Extension Harness 67, 87
Display Software 102
Dust Plugs 95

E

Emergency Safety 2
Emergency Spraying 15
Error Messages 7

G

General Spray Operation Strategies 30
General System Layout 47

H

Hypro Dry Boom Adapters 99

I

Inspect the Plunger Seal 35
Inspect the Spray System 17
Interchange the Components 30

J

Jump Start/Charge/Weld On 17

L

Left Boom Harness 56
Left Boom Harness - Boost 89
Left Boom Harness - No Boost 90

N

No Boost (One Solenoid) Nozzle Power Hub 89
Nozzle Valve Assembly 96

O

Operation Objectives 5
Original Equipment Manufacturer Kits 100

P

Parts Identification 87
Personal Protective Equipment 2
Power Harness 65, 92
Power Hubs 48
Pressure Sensor 85, 91
Pressure Sensor Breakout Harness 99
Pressure Sensor Extension Harness 84, 91
Pressurized Fluid Lines 2

R

Right Boom Harness 60
Right Boom Harness - Boost 90
Right Boom Harness - No Boost 90
Rinse the Product Tank and Boom Line 17

S

Safety Signs 1
Service the Spray System 17
Serviceable Parts 100
Signal Words 1
Solving Challenge 1
  Speed and Rate Ranges 5
Solving Challenge 2
  Drift or Spray Pattern Collapse 5
Solving Challenge 3
  Rate Control 5
Specific Screens 8
Strainers and Screens 18
System Identification 3
System Performance Optimization 30
System Testing and Tuning 22

T

Technical Bulletin 43
Test the Pressure Sensor Signal 39
This Manual 3
Tip Selection and Capacities 16
  For Dual Solenoid - Boost Nozzles 16
  For Single Solenoid - Non-Boost Nozzles 16
Tips 97
Troubleshooting Baseline Evaluation Process 21
Troubleshooting Chart 31
Troubleshooting Recommended Guidelines 21

U

Update Cab Box Software 102

V

Valve Driver Module 91

W

Warranty 45
Wilger Nozzle Bodies 98
Winterize for Storage 17

Y

Y-Adapter Harness 94

©2017 Capstan Ag Systems Inc. | SharpShooter™ with Rate Sync™ for Turf

APPLICATION SYSTEMS
FOR PROFESSIONALS™

P/N 118556-002 Rev. B | Revised 10/2017 | ©2017 Capstan Ag Systems, Inc.